带**尺寸：非常重要尺寸；　带*尺寸：重要尺寸；　无*尺寸：根据一般公差标准GB/T1804-92&GB6403.4-86中等级加工

MT_04_229856VX_0_806

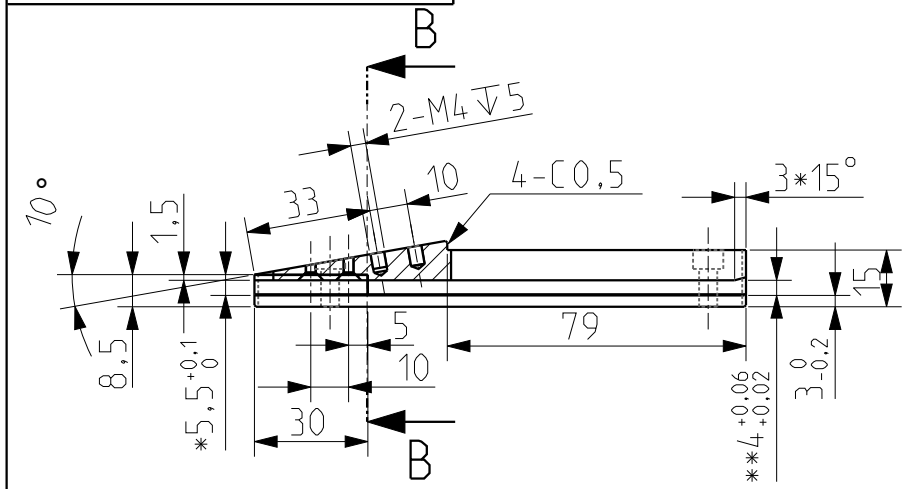

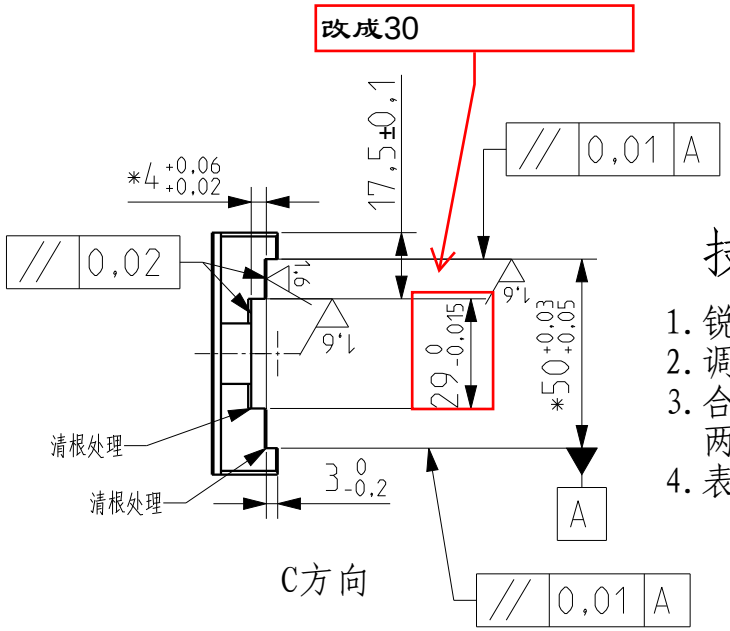

C方向

3.2

技术要求

1. 锐边倒钝
2. 调质后加工HRC28-32
3. 合金紧固后螺栓
   两头不能外漏
4. 表面做发黑处理

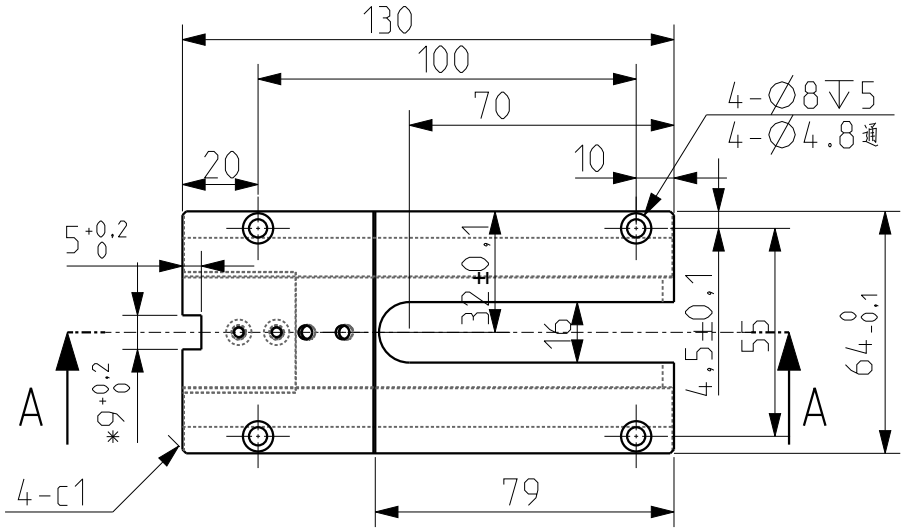

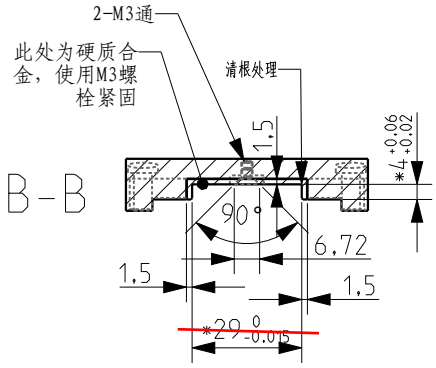

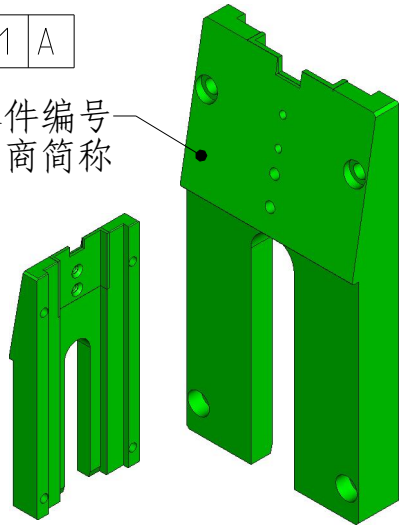

Edition / Year,Month	1 /2308	2 /	3 /	4 /	5 /	6 /
Material	45+硬质合金	Drawn	Checked	Approv.	Scale	1:2
Mass	0,56 kg	CX	CZ	JL	Date	2023.8.1

First Angle Projection	Product Name	Drawing No.	Version
	前油石导板	MT_04_229856VX_0_806	V1

Change Notes			

Dimensions with **: very important dimension; Dimensions with *: important dimension; Dimensions without *: according to general tolerance standard