	铣	快丝	车	热处	磨	CNC	慢丝	火花	表处	
加工顺序										
加工人签字（工号）										

PO番号：PO-0940
IHP番号：IHP001
数量：1件
下单：11月22日
交期：12月3日

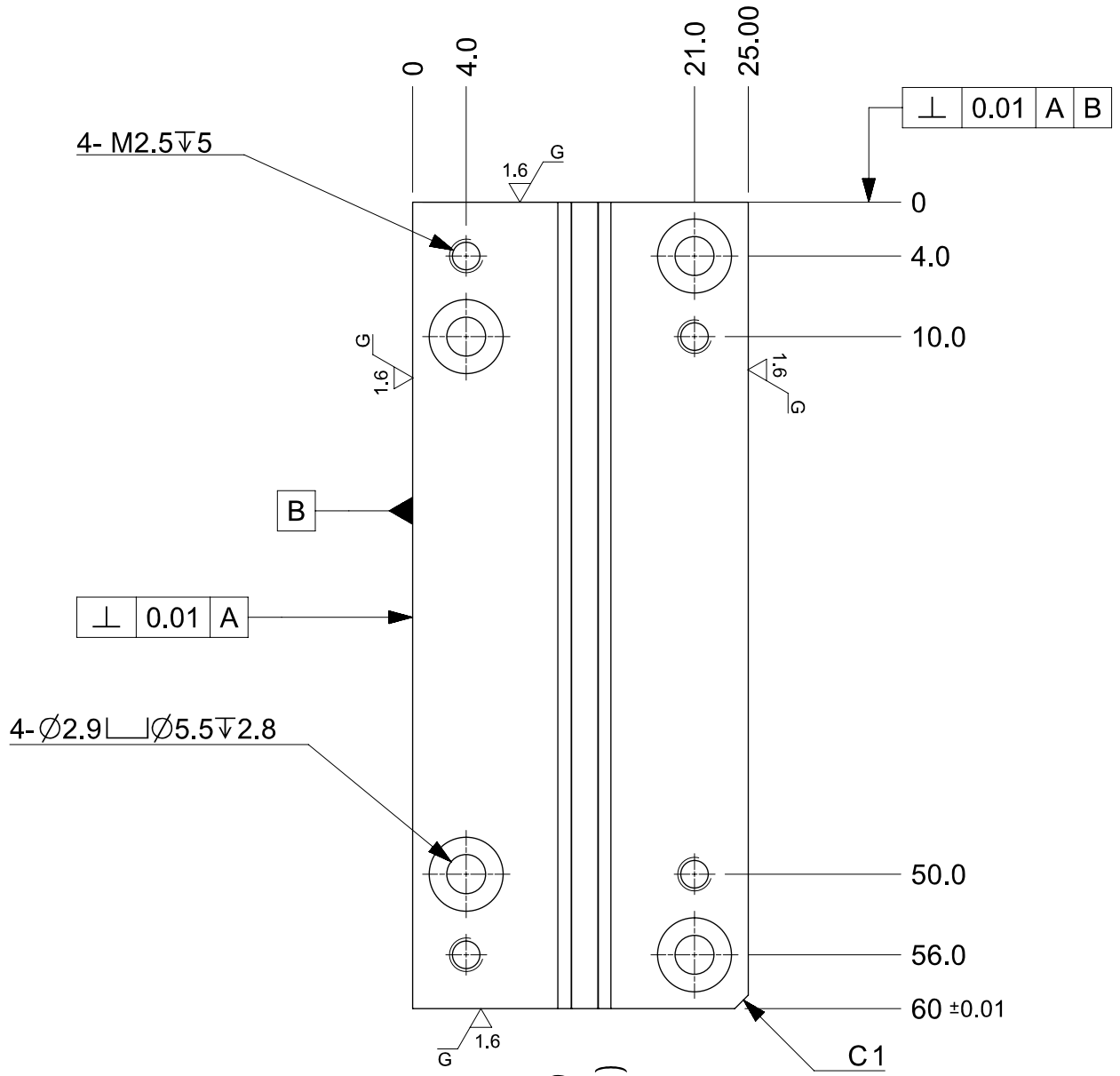

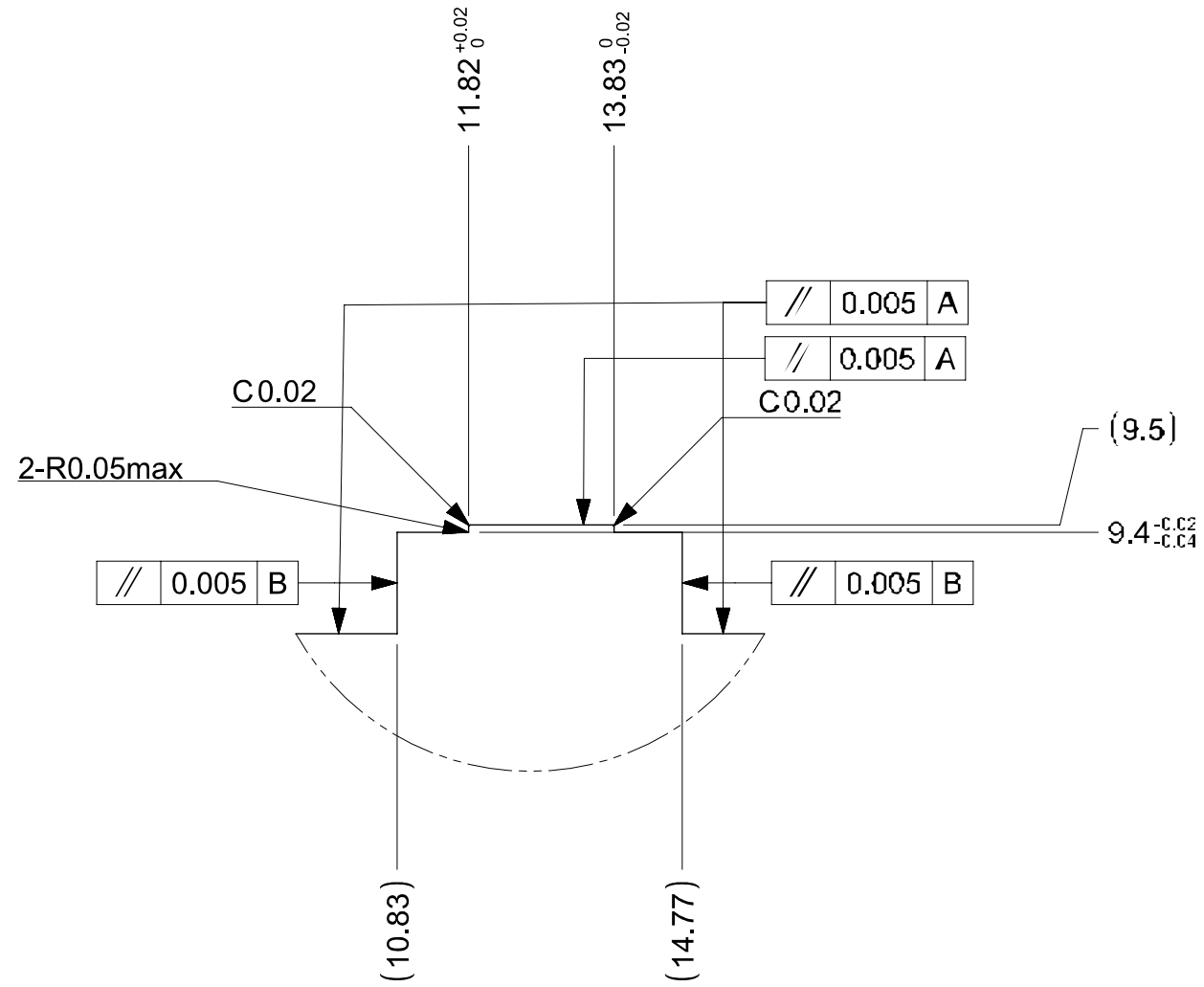

DETAIL A
SCALE 10:1
NO BREAK EDGE

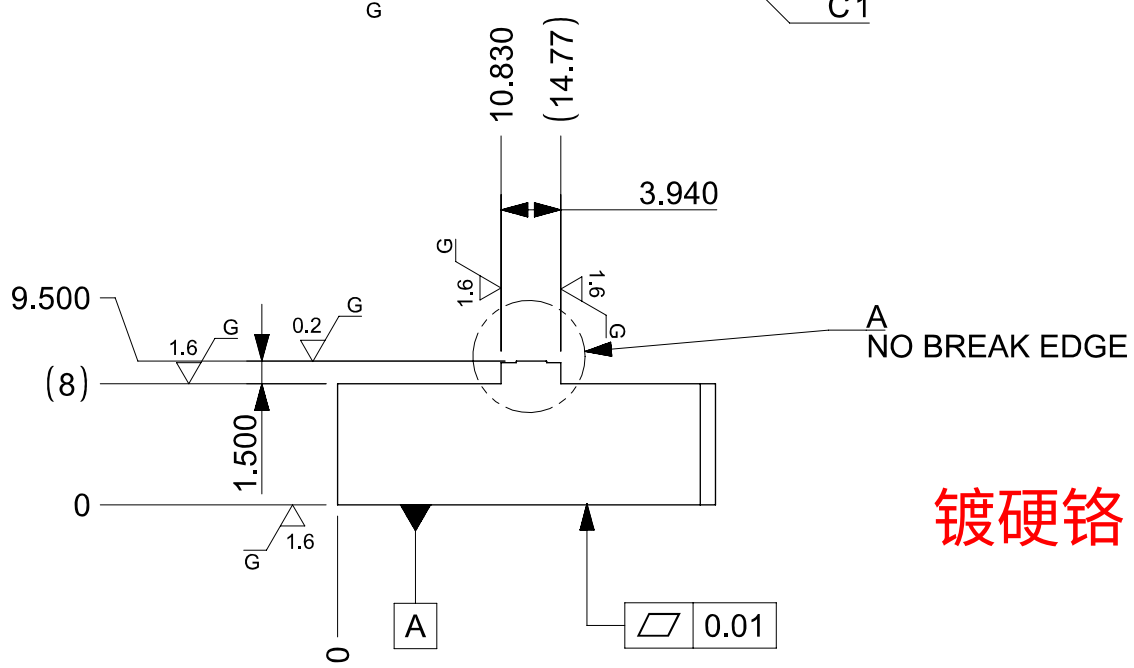

镀硬铬

1.6 (1.6 G 0.2 G)

BREAK ALL SHARP EDGES 0.1mm UNLESS OTHERWISE SPECIFIED
ALL INSIDE CORNERS TO BE R0.2 MAX UNLESS OTHERWISE SPECIFIED

SURFACE FINISH

0.2	▽▽▽▽
1.6	▽▽▽
6.3	▽▽
25	▽
○	~

DIMENSION MARK

↧	DEPTH
⌴	C'BORE
∨	C'SINK

DIMENSION UNITS: mm	SCALE: 2:1	Material: SKD11	
GENERAL TOLERANCES (UNLESS SPECIFIED)		Heat treat: HRC 62	
		Finish: HARD CHROME	
ANGULAR TOL ± .5°		CURRENT REV DESC: EC DESCRIPTION	
4 PLACES	± --		
3 PLACES	± 0.005		
2 PLACES	± 0.05	EC NO: EC NO	
1 PLACE	± 0.1	DRWN: H.TAKAI	2022/11/10
0 PLACES	± 0.3	CHK'D: G.XINYAO	2022/11/10
		APPR: T.KAYAMA	2022/11/10
		ORIG DRWN BY: H.TAKAI	2022/11/10
TOOL NUMBER: --		THIRD ANGLE PROJECTION	DRAWING: A3-SIZE / SERIES: --

RAIL

TOOL DESIGN DRAWING

DOCUMENT NUMBER	DOC TYPE	DOC SUB-TYPE	REVISION
AMM38-A1-003	---	---	A

MATERIAL NUMBER | CUSTOMER: -- | SHEET NUMBER: 1 OF 1

DOCUMENT STATUS	P1	RELEASE DATE	

FORMAT: tb-tool-A3
REVISION: J1
DATE: 2021/05/01

A1

	铣	快丝	车	热处	磨	CNC	慢丝	火花	表处	
加工顺序										
加工人签字（工号）										

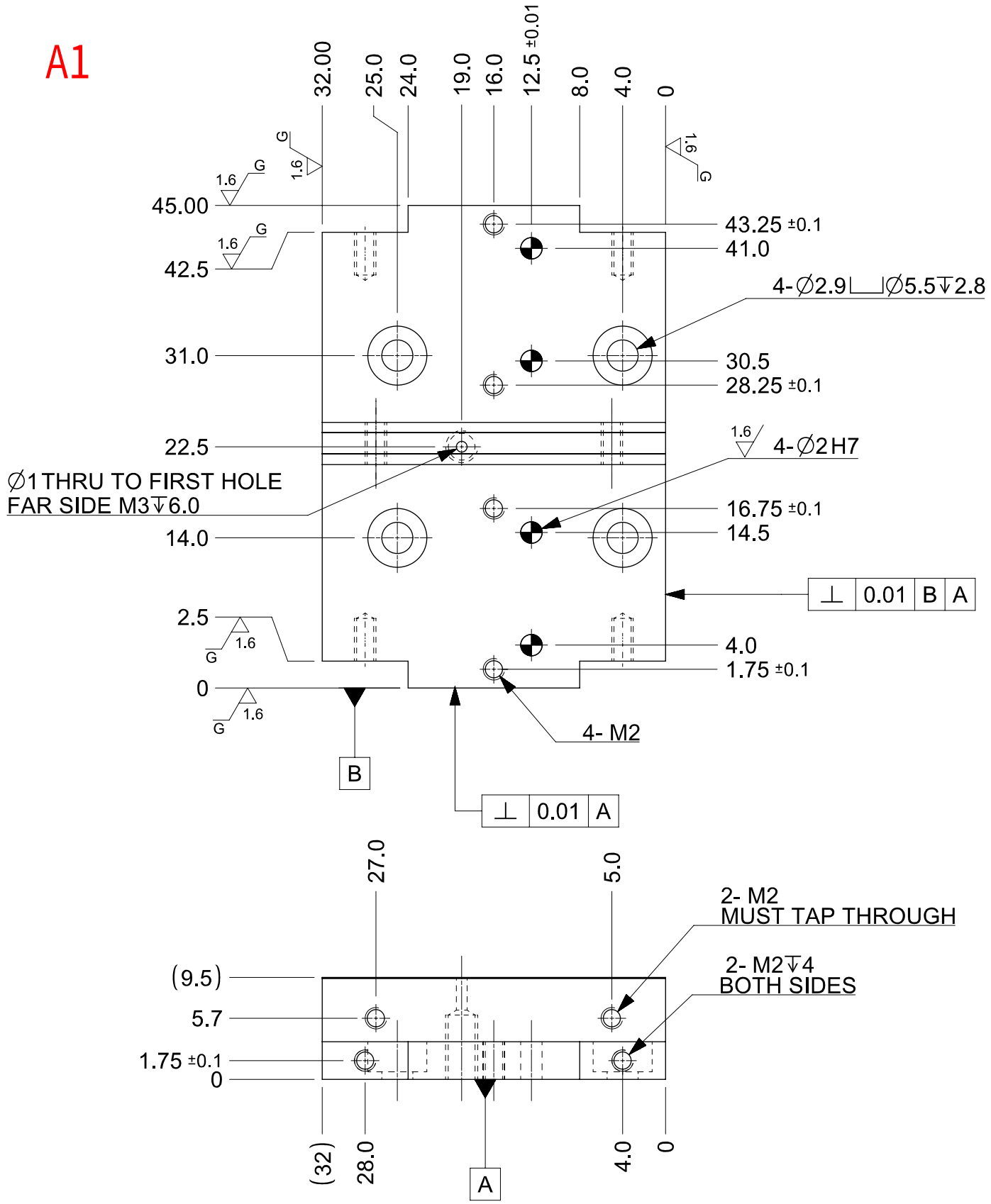

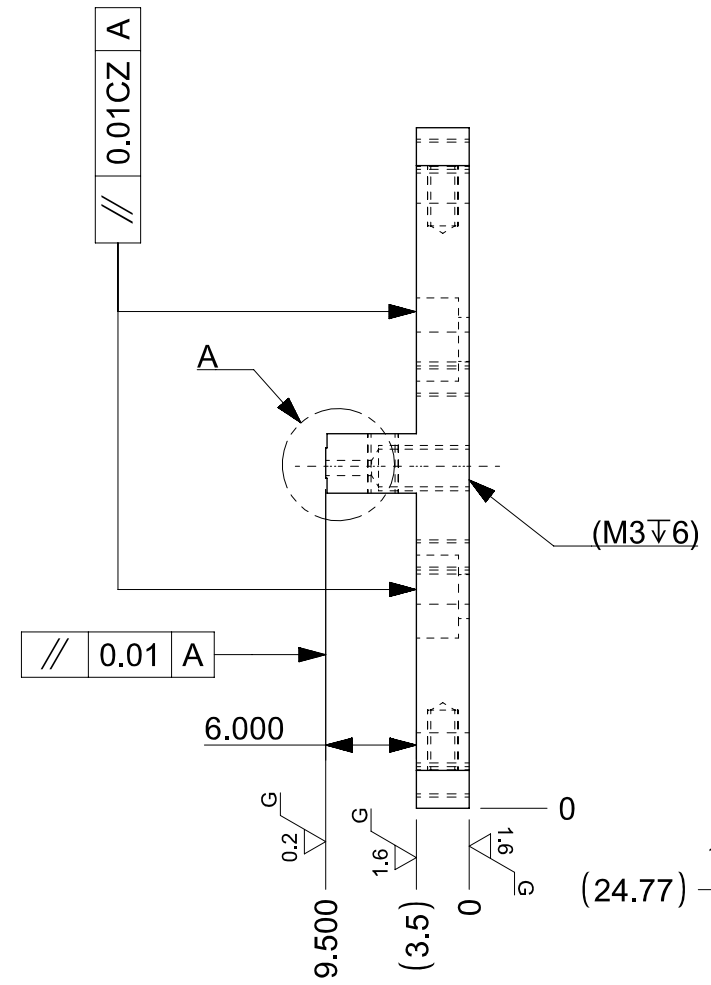

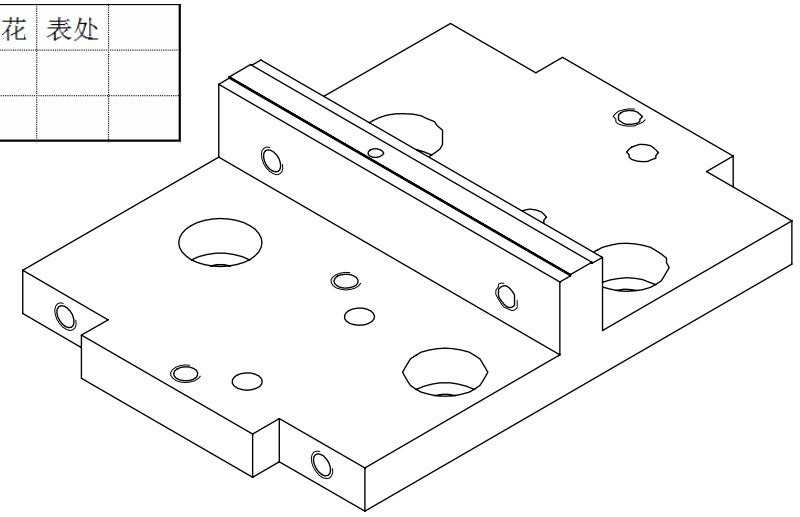

REF.

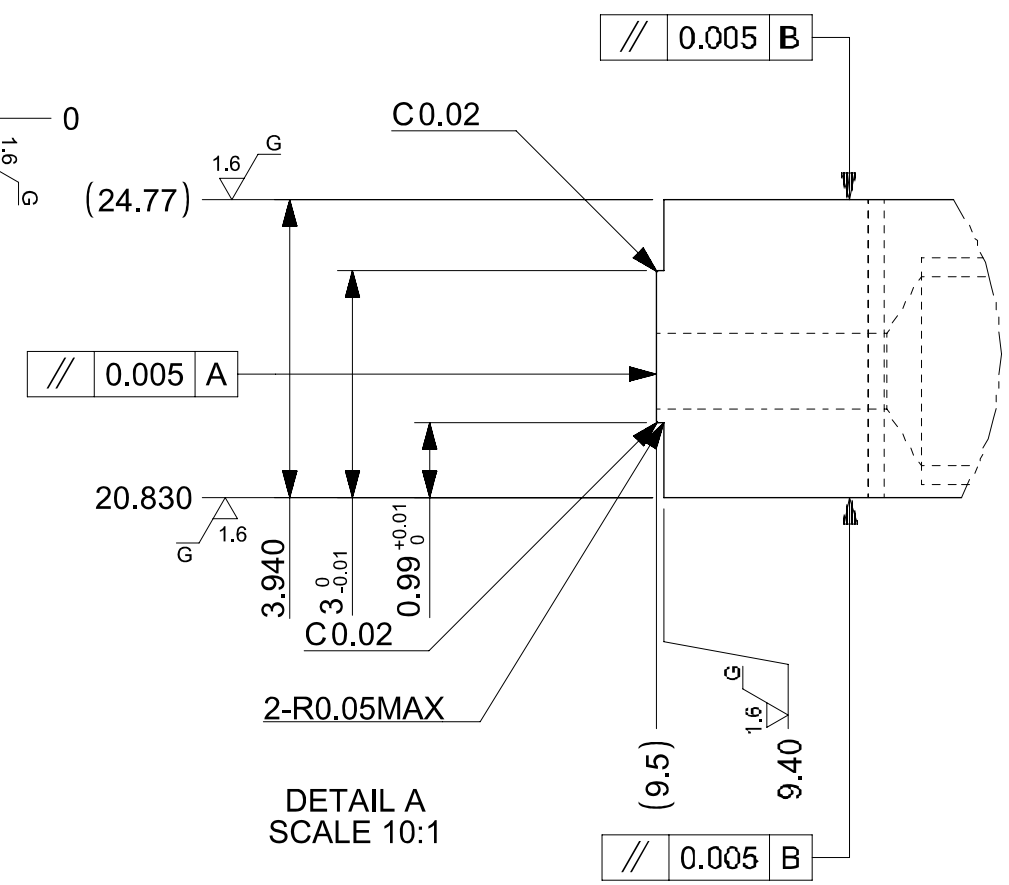

DETAIL A
SCALE 10:1

PO番号：PO-0940
IHP番号：IHP002
数量：1件
下单：11月22日
交期：12月3日

SURFACE FINISH

0.2	
1.6	
6.3	
25	

DIMENSION MARK

↧	DEPTH
⌴	C'BORE
∨	C'SINK

镀硬铬

6.3 (1.6 1.6 G 0.2 G)

BREAK ALL SHARP EDGES 0.1mm UNLESS OTHERWISE SPECIFIED
ALL INSIDE CORNERS TO BE R0.2 MAX UNLESS OTHERWISE SPECIFIED

DIMENSION UNITS: mm	SCALE: 2:1	Material: SKD11	RAIL 3
GENERAL TOLERANCES (UNLESS SPECIFIED)		Heat treat: HRC 62	
		Finish: HARD CHROME	
ANGULAR TOL ± .5°		CURRENT REV DESC: EC DESCRIPTION	
4 PLACES ± ---			
3 PLACES ± 0.005		EC NO: EC NO	TOOL DESIGN DRAWING
2 PLACES ± 0.05		DRWN: G.XINYAO 2022/11/21	
1 PLACE ± 0.1		CHK'D: G.XINYAO 2022/11/21	DOCUMENT NUMBER: AMM38-A1-007
0 PLACES ± 0.3		APPR: T.KAYAMA 2022/11/21	DOC TYPE: --- / DOC SUB: --- / REVISION: A
TOOL NUMBER: ---		ORIG DRWN BY: G.XINYAO 2022/11/21	
		THIRD ANGLE PROJECTION / DRAWING: A3-SIZE / SERIES: —	MATERIAL NUMBER / CUSTOMER: -- / SHEET NUMBER: 1 OF 1

DOCUMENT STATUS	P1	RELEASE DATE	

FORMAT: tb-tool-A3
REVISION: J1
DATE: 2021/05/01

A1

	铣	快丝	车	热处	磨	CNC	慢丝	火花	表处	
加工顺序										
加工人签字（工号）										

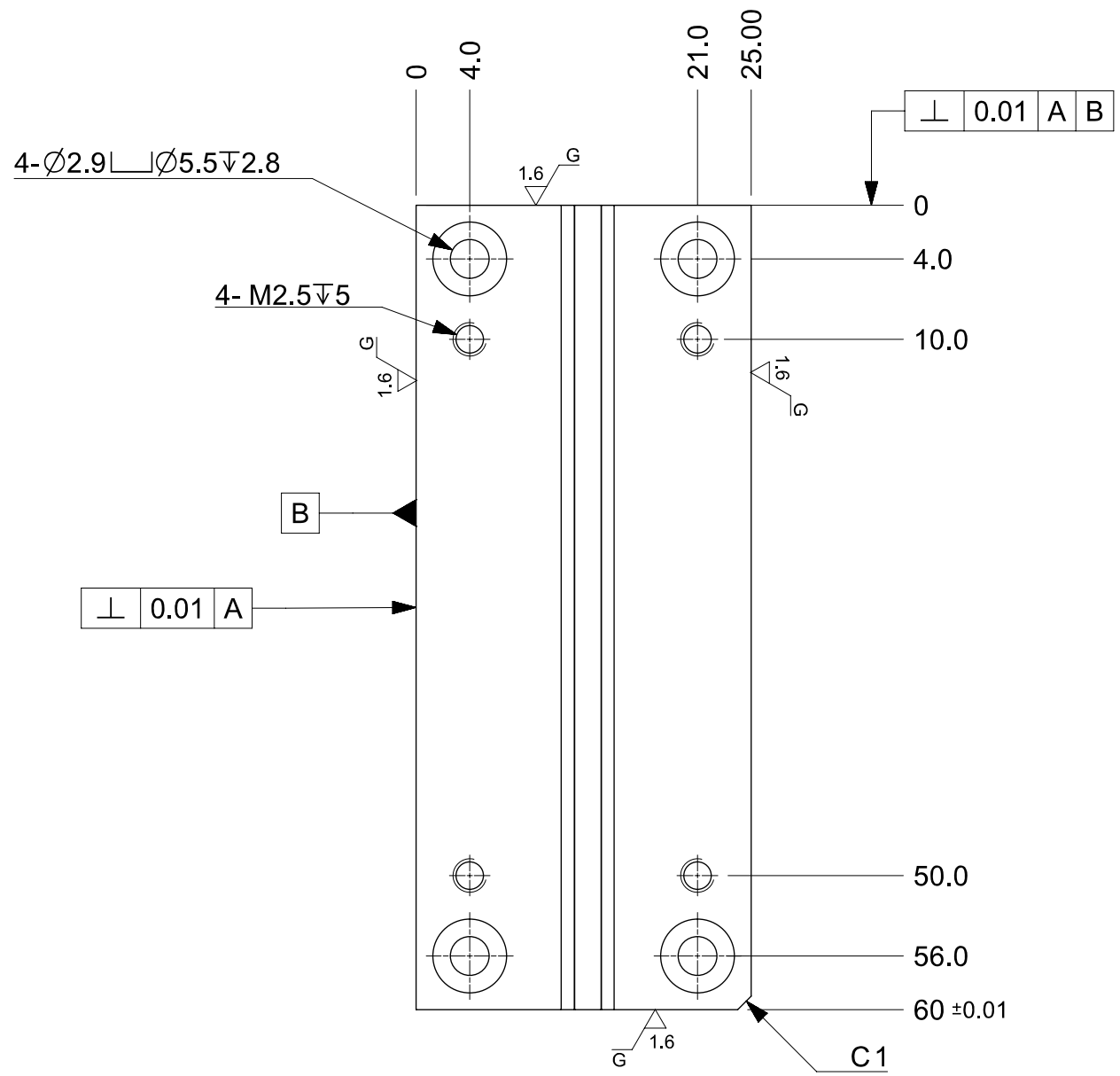

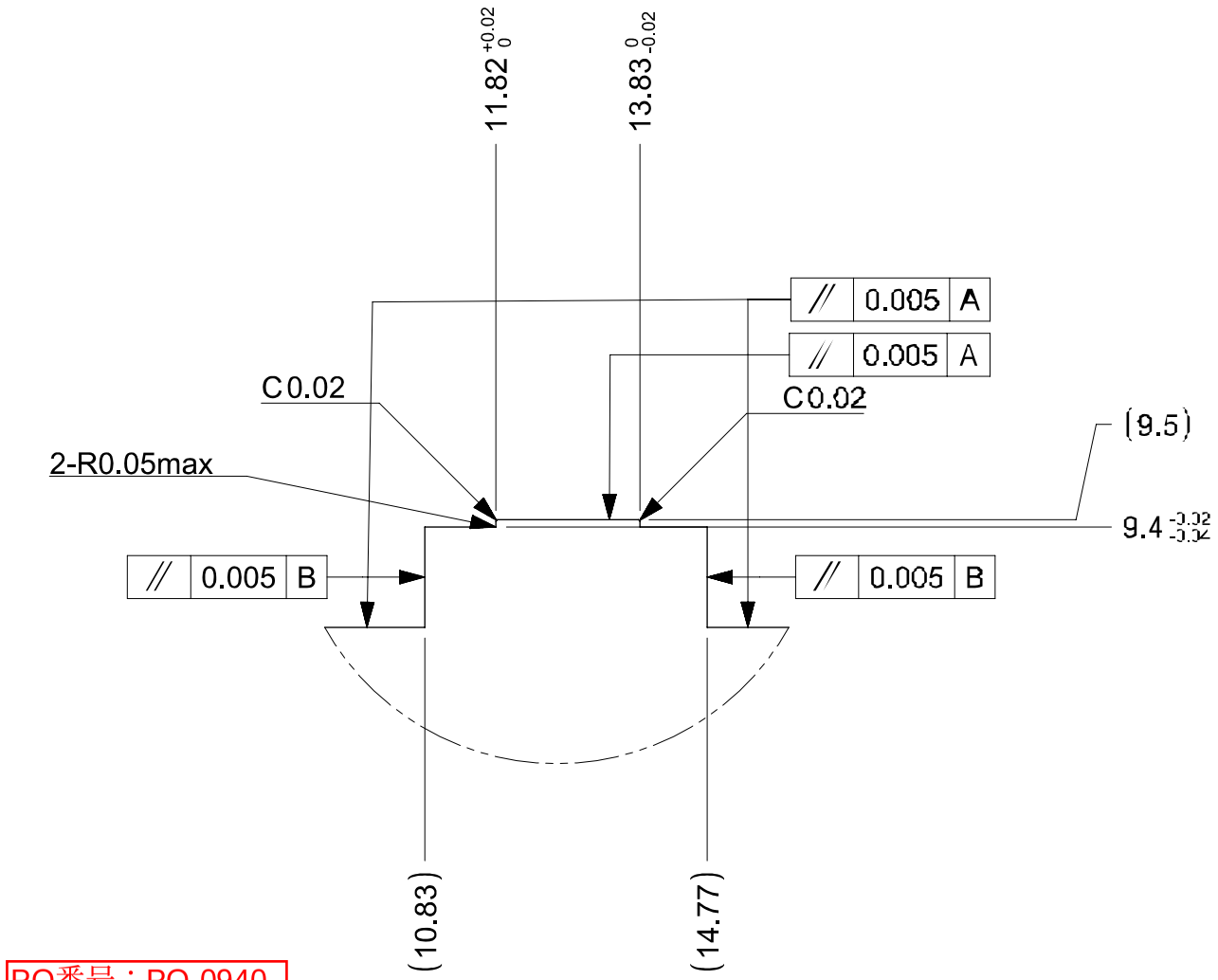

PO番号：PO-0940
IHP番号：IHP003
数量：1件
下单：11月22日
交期：12月3日

DETAIL A
SCALE 10:1
NO BREAK EDGE

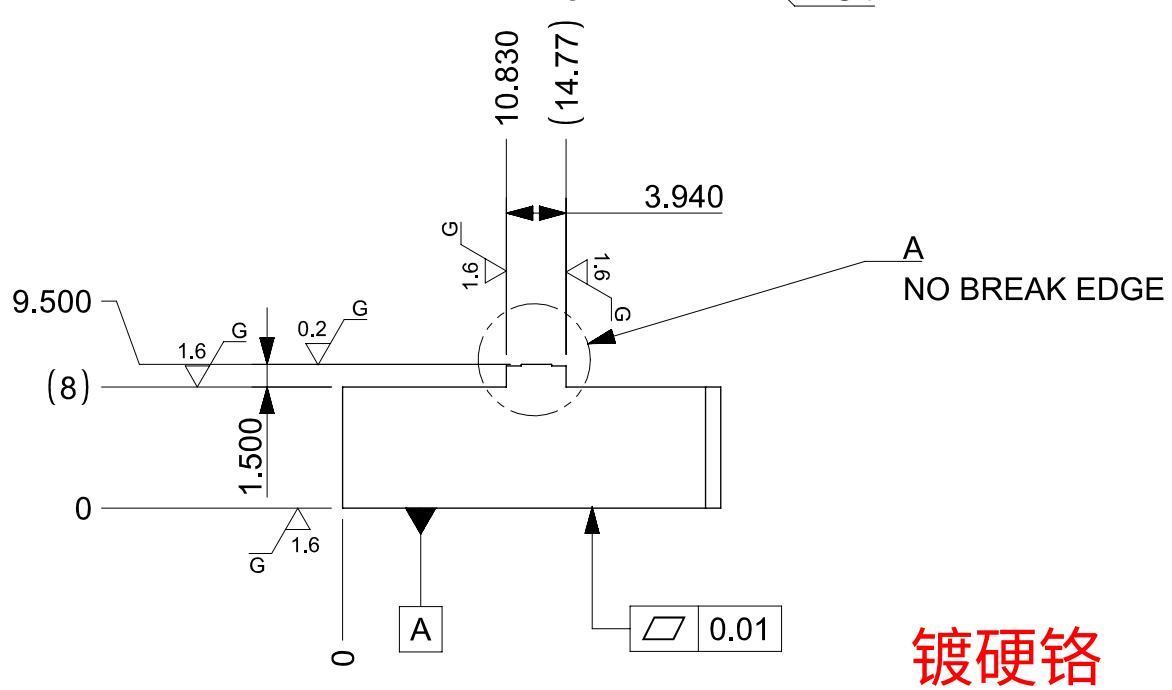

1.6 (1.6 G 0.2 G)

BREAK ALL SHARP EDGES 0.1mm UNLESS OTHERWISE SPECIFIED
ALL INSIDE CORNERS TO BE R0.2 MAX UNLESS OTHERWISE SPECIFIED

镀硬铬

SURFACE FINISH

0.2	
1.6	
6.3	
25	

DIMENSION MARK

↧	DEPTH
⌴	C'BORE
∨	C'SINK

DOCUMENT STATUS	P1	RELEASE DATE	

DIMENSION UNITS	SCALE
mm	2:1

GENERAL TOLERANCES (UNLESS SPECIFIED)

ANGULAR TOL	±	.5°
4 PLACES	±	--
3 PLACES	±	0.005
2 PLACES	±	0.05
1 PLACE	±	0.1
0 PLACES	±	0.3

TOOL NUMBER: --

Material: SKD11
Heat treat: HRC 62
Finish: HARD CHROME

CURRENT REV DESC: EC DESCRIPTION

EC NO:	EC NO	
DRWN:	H.TAKAI	2022/11/10
CHK'D:	G.XINYAO	2022/11/10
APPR:	T.KAYAMA	2022/11/10
ORIG DRWN BY:	H.TAKAI	2022/11/10

THIRD ANGLE PROJECTION | DRAWING: A3-SIZE | SERIES: --

RAIL 7

TOOL DESIGN DRAWING

DOCUMENT NUMBER	DOC TYPE	DOC SUB	REVISION
AMM38-A1-032	---	---	A

MATERIAL NUMBER | CUSTOMER: -- | SHEET NUMBER: 1 OF 1

FORMAT: tb-tool-A3
REVISION: J1
DATE: 2021/05/01

A1

	铣	快丝	车	热处	磨	CNC	慢丝	火花	表处	
加工顺序										
加工人签字（工号）										

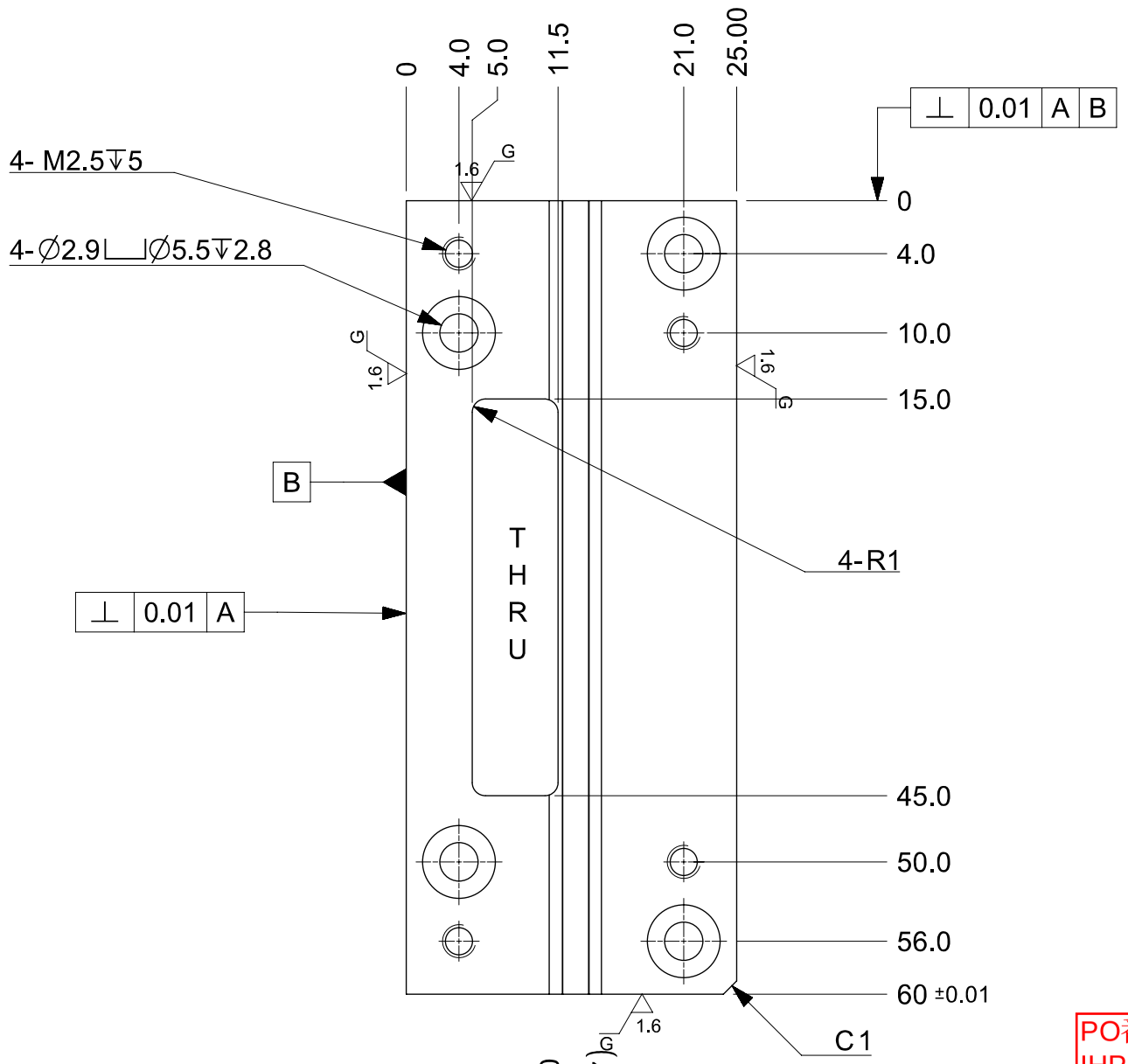

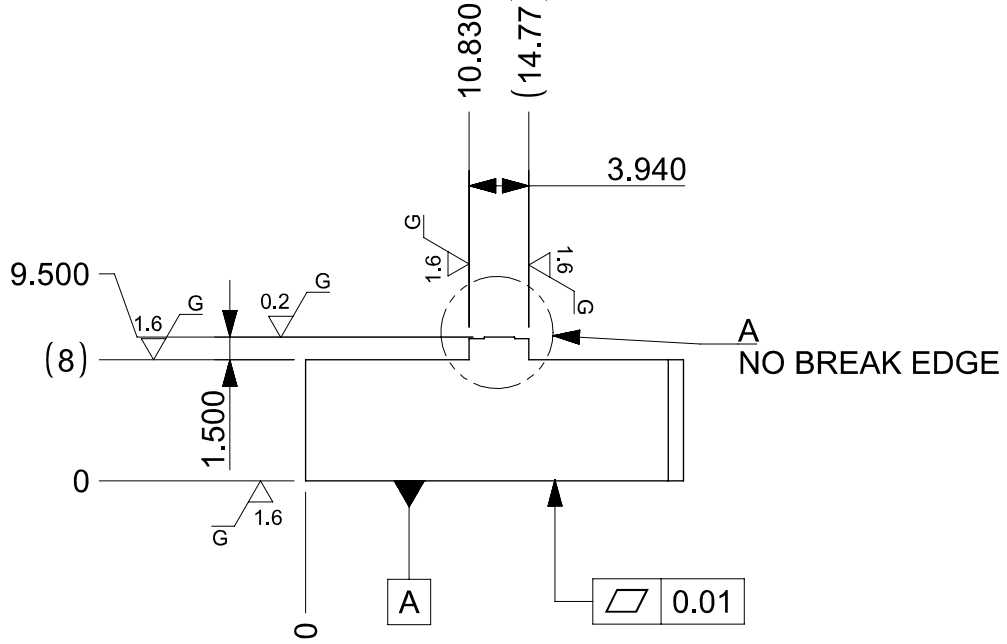

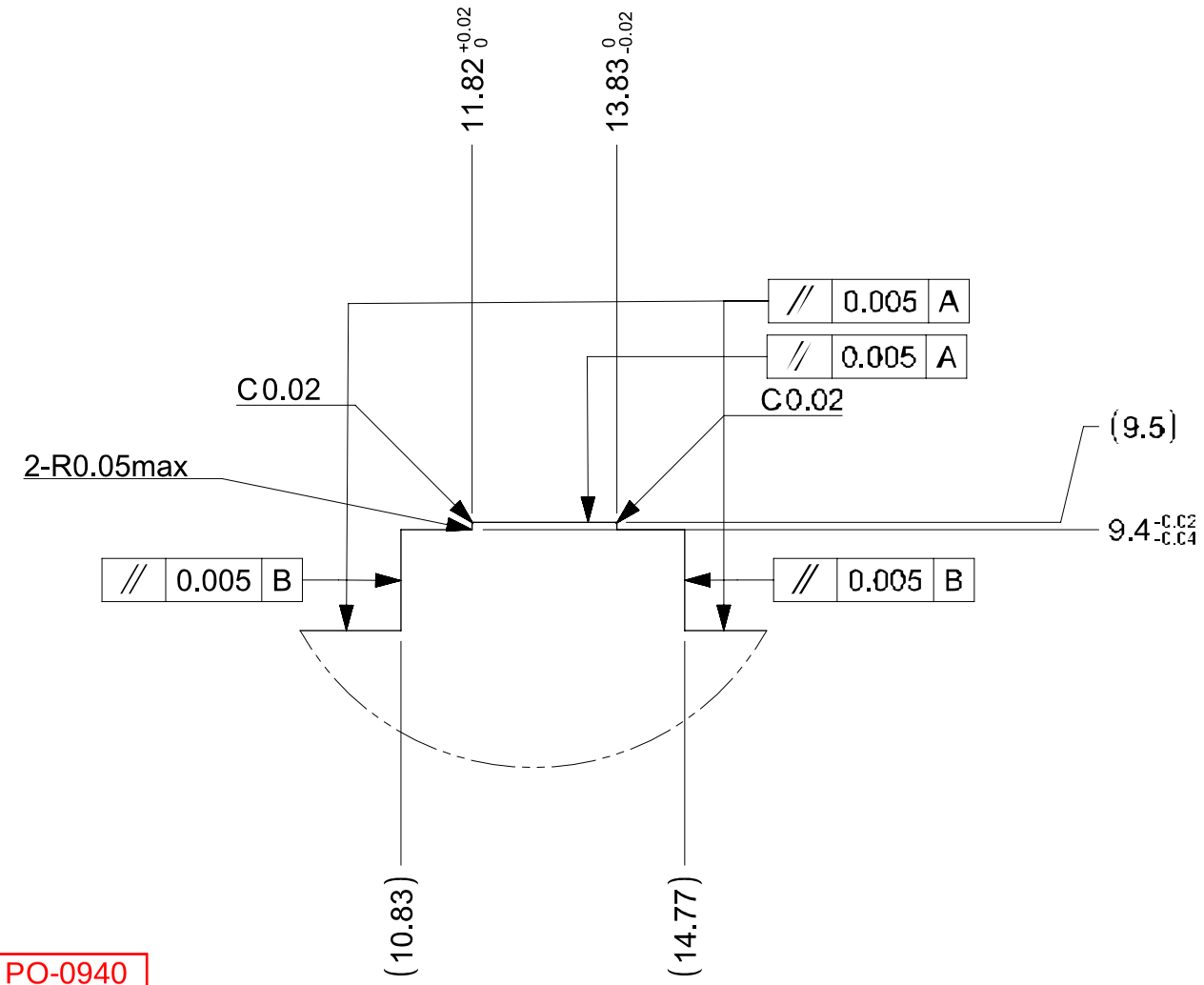

DETAIL A
SCALE 10:1
NO BREAK EDGE

PO番号：PO-0940
IHP番号：IHP004
数量：1件
下单：11月22日
交期：12月3日

1.6 (1.6 G 0.2 G)

BREAK ALL SHARP EDGES 0.1mm UNLESS OTHERWISE SPECIFIED
ALL INSIDE CORNERS TO BE R0.2 MAX UNLESS OTHERWISE SPECIFIED

SURFACE FINISH

0.2	
1.6	
6.3	
25	

DIMENSION MARK

↧	DEPTH
⌴	C'BORE
∨	C'SINK

镀硬铬

DIMENSION UNITS: mm	SCALE: 2:1	Material: SKD11	
GENERAL TOLERANCES (UNLESS SPECIFIED)		Heat treat: HRC 62	
		Finish: HARD CHROME	
ANGULAR TOL ± .5°		CURRENT REV DESC: EC DESCRIPTION	
4 PLACES ± --			RAL 6
3 PLACES ± 0.005			
2 PLACES ± 0.05		EC NO: EC NO	
1 PLACE ± 0.1		DRWN: H.TAKAI 2022/11/10	TOOL DESIGN DRAWING
0 PLACES ± 0.3		CHK'D: G.XINYAO 2022/11/10	
		APPR: T.KAYAMA 2022/11/10	DOCUMENT NUMBER: AMM38-A1-102 / DOC TYPE: --- / DOC SUB-TYPE: --- / REVISION: A
		ORIG DRWN BY: H.TAKAI 2022/11/10	
TOOL NUMBER: --		THIRD ANGLE PROJECTION / DRAWING: A3-SIZE / SERIES: —	MATERIAL NUMBER: / CUSTOMER: -- / SHEET NUMBER: 1 OF 1

DOCUMENT STATUS	P1	RELEASE DATE	

FORMAT: tb-tool-A3
REVISION: J1
DATE: 2021/05/01

A1

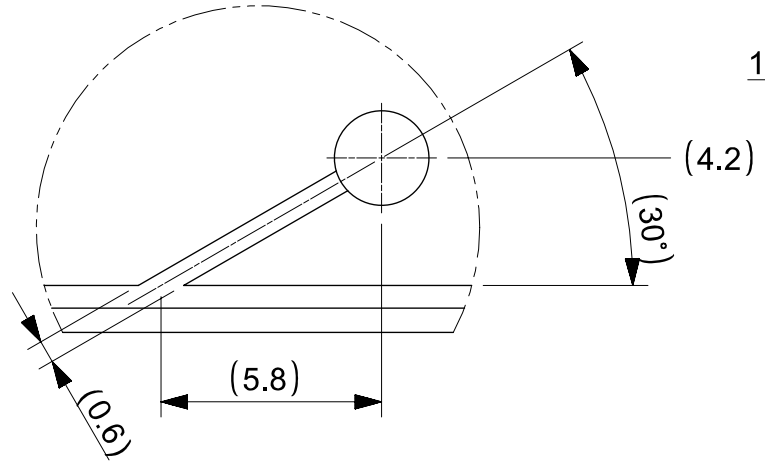

DETAIL A
SCALE 5:1
(7箇所)

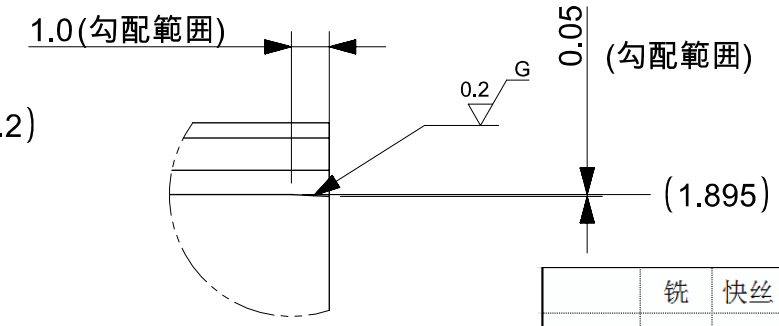

DETAIL E
SCALE 5:1

	铣	快丝	车	热处	磨	CNC	慢丝	火花	表处	
加工顺序										
加工人签字（工号）										

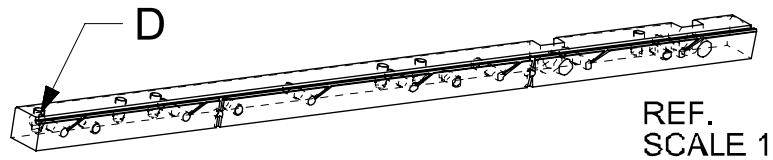

REF.
SCALE 1:2

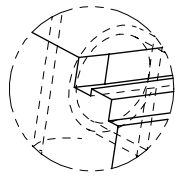

DETAIL D
SCALE 5:1

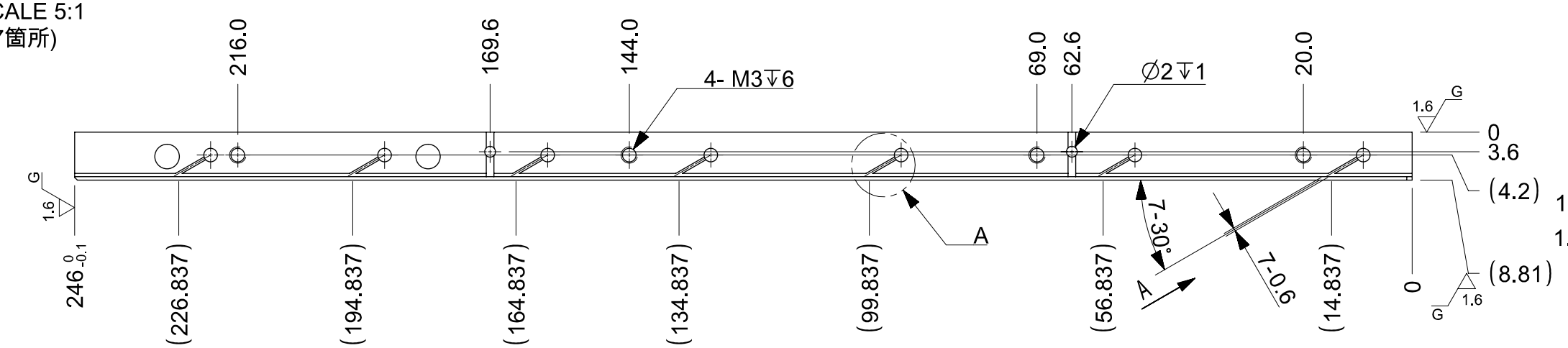

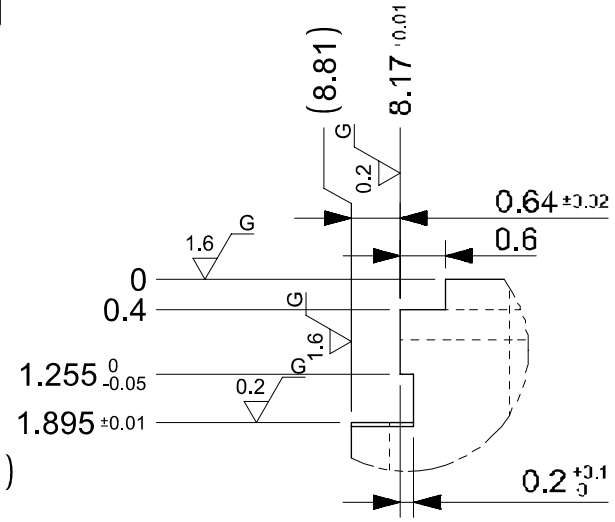

DETAIL B
SCALE 10:1
NO BREAK EDGE

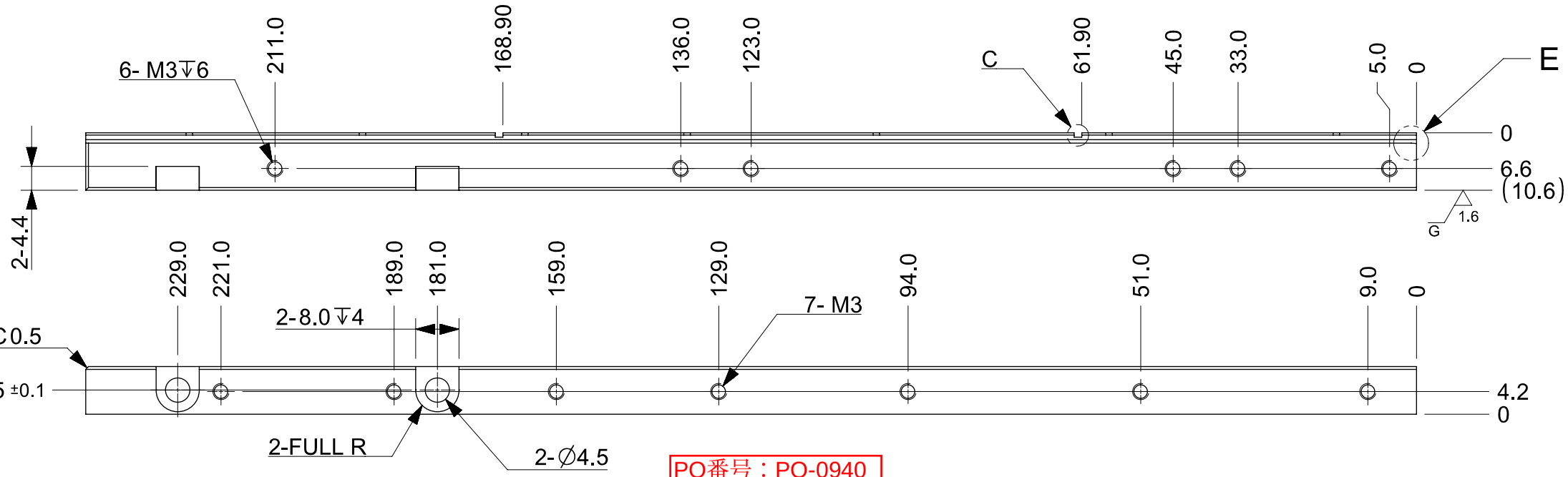

B
NO BREAK EDGE

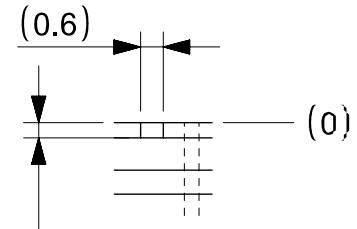

ARROW A
SCALE 5:1
7力所

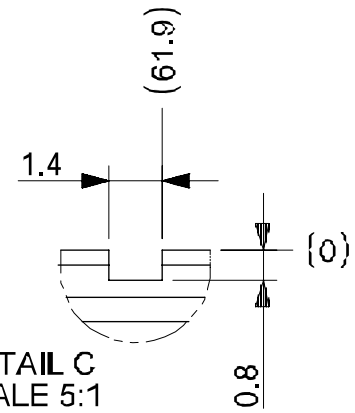

DETAIL C
SCALE 5:1
2力所

PO番号：PO-0940
IHP番号：IHP005
数量：1件
下単：11月22日
交期：12月3日

镀硬铬

6.3 (1.6 G 0.2 G)

SURFACE FINISH

0.2	▽▽▽▽
1.6	▽▽▽
6.3	▽▽
25	▽
✓	~

DIMENSION MARK

↧	DEPTH
⌴	C'BORE
∨	C'SINK

BREAK ALL SHARP EDGES 0.1mm UNLESS OTHERWISE SPECIFIED
ALL INSIDE CORNERS TO BE R0.2 MAX UNLESS OTHERWISE SPECIFIED

DOCUMENT STATUS	P1	RELEASE DATE	

DIMENSION UNITS	SCALE
mm	1:1

GENERAL TOLERANCES (UNLESS SPECIFIED)

ANGULAR TOL	±	.5°
4 PLACES	±	--
3 PLACES	±	0.005
2 PLACES	±	0.05
1 PLACE	±	0.1
0 PLACES	±	0.3

TOOL NUMBER: --

Material: SKD11
Heat treat: HRC 62
Finish: HARD CHROME

CURRENT REV DESC: EC DESCRIPTION

EC NO:	EC NO	
DRWN:	M.SAKAGUCHI	2022/11/16
CHK'D:	G.XINYAO	2022/11/16
APPR:	T.KAYAMA	2022/11/16
ORIG DRWN BY:	M.SAKAGUCHI	2022/11/16

THIRD ANGLE PROJECTION | DRAWING: A3-SIZE | SERIES: --

CONVEYOR RAIL A

TOOL DESIGN DRAWING

DOCUMENT NUMBER	DOC TYPE	DOC FAMILY	REVISION
AMM38-A5-001	---	---	A

MATERIAL NUMBER | CUSTOMER: -- | SHEET NUMBER: 1 OF 1

FORMAT: tb-top(-)A3
REVISION: J1
DATE: 2021/05/01

A1

	铣	快丝	车	热处	磨	CNC	慢丝	火花	表处	
加工顺序										
加工人签字（工号）										

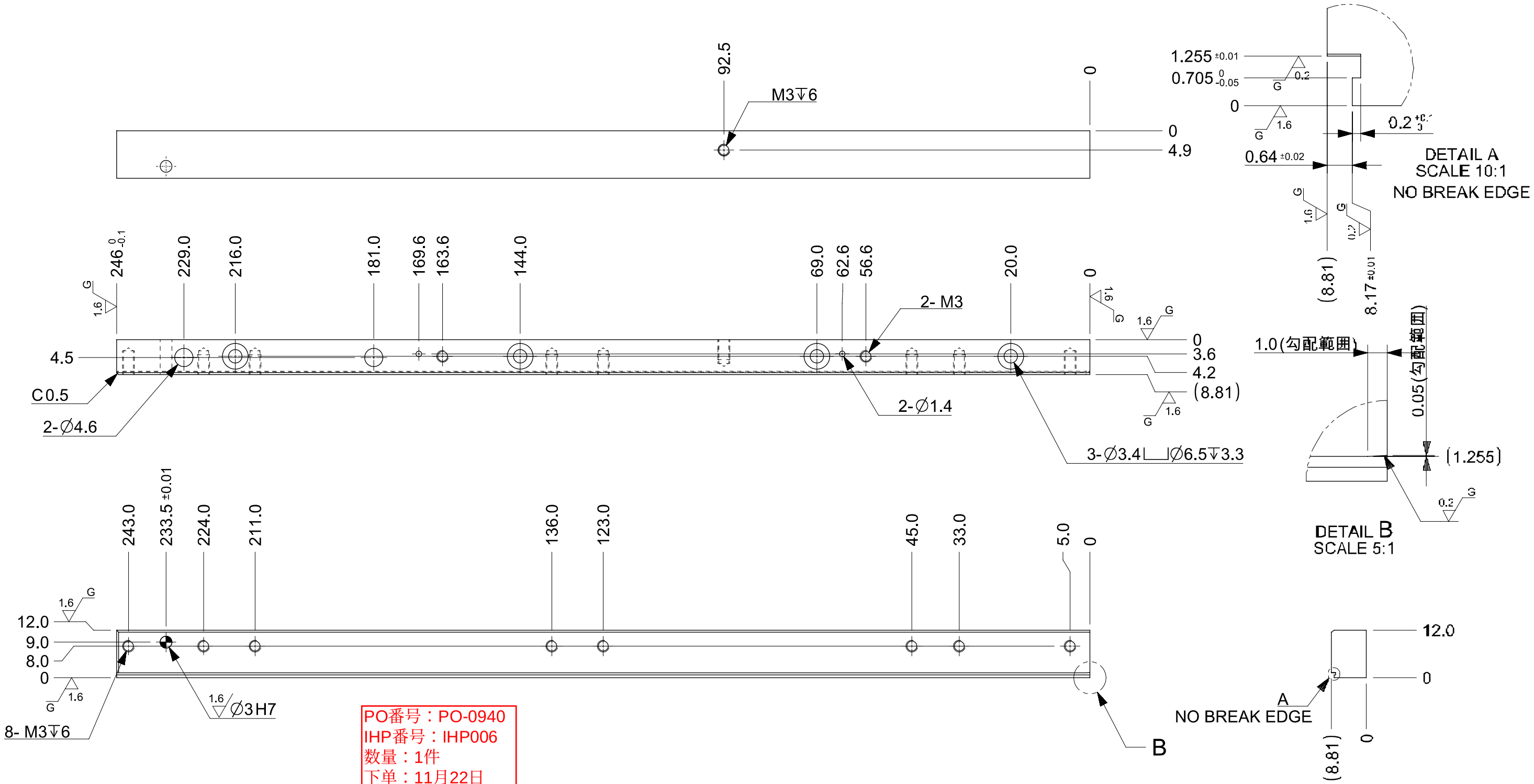

PO番号：PO-0940
IHP番号：IHP006
数量：1件
下单：11月22日
交期：12月3日

SURFACE FINISH

0.2	
1.6	
6.3	
25	

DIMENSION MARK

↧	DEPTH
⌴	C'BORE
∨	C'SINK

镀硬铬

6.3 (1.6 1.6 G 0.2 G)

BREAK ALL SHARP EDGES 0.1mm UNLESS OTHERWISE SPECIFIED
ALL INSIDE CORNERS TO BE R0.2 MAX UNLESS OTHERWISE SPECIFIED

DIMENSION UNITS: mm	SCALE: 1:1	Material: SKD11	
GENERAL TOLERANCES (UNLESS SPECIFIED)		Heat treat: HRC 62	
		Finish: HARD CHROME	
ANGULAR TOL ± .5°		CURRENT REV DESC: EC DESCRIPTION	
4 PLACES ± --			
3 PLACES ± 0.005			
2 PLACES ± 0.05		EC NO: EC NO	
1 PLACE ± 0.1		DRWN: M.SAKAGUCHI 2022/11/16	
0 PLACES ± 0.3		CHK'D: G.XINYAO 2022/11/16	
		APPR: T.KAYAMA 2022/11/16	
		ORIG DRWN BY: M.SAKAGUCHI 2022/11/16	
TOOL NUMBER --		THIRD ANGLE PROJECTION	DRAWING A3-SIZE / SERIES --

CONVEYOR RAIL B

TOOL DESIGN DRAWING

DOCUMENT NUMBER	DOC TYPE	DOC SUB-TYPE	REVISION
AMM38-A5-002	---	---	A

MATERIAL NUMBER | CUSTOMER: -- | SHEET NUMBER: 1 OF 1

DOCUMENT STATUS	P1	RELEASE DATE	

FORMAT: tb-tool-A3
REVISION: J1
DATE: 2021/05/01

A1

	铣	快丝	车	热处	磨	CNC	慢丝	火花	表处	
加工顺序										
加工人签字（工号）										

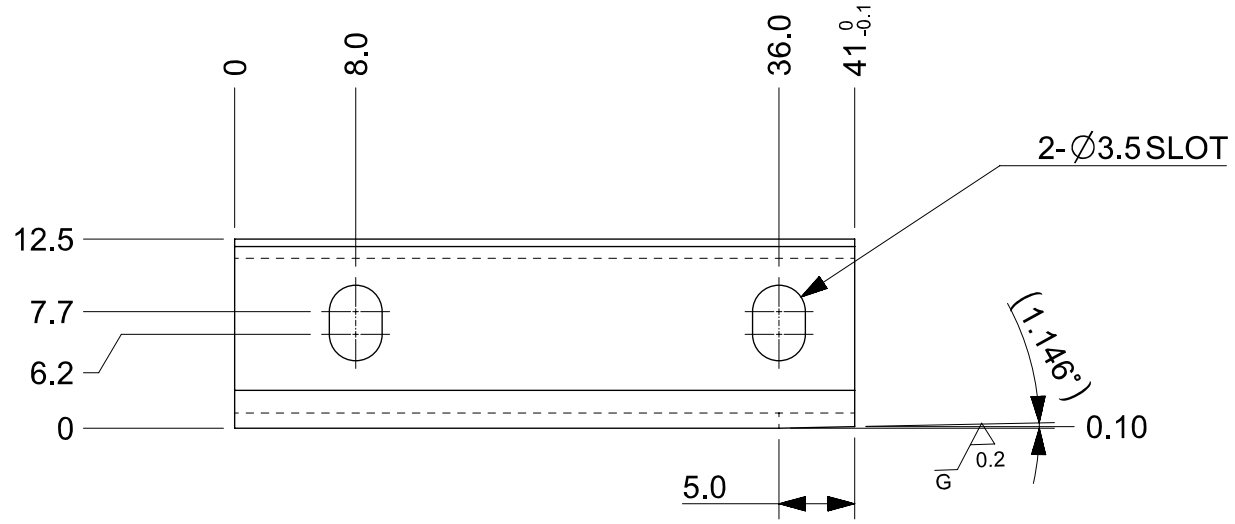

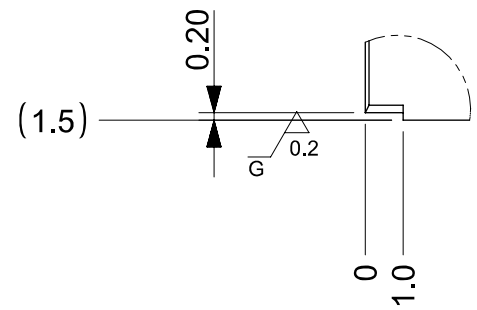

DETAIL A
SCALE 5:1

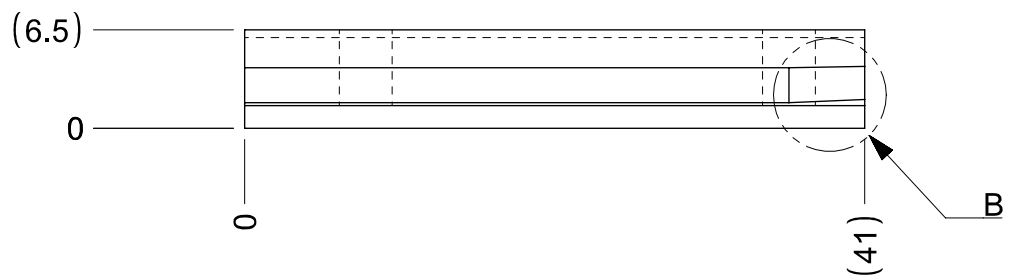

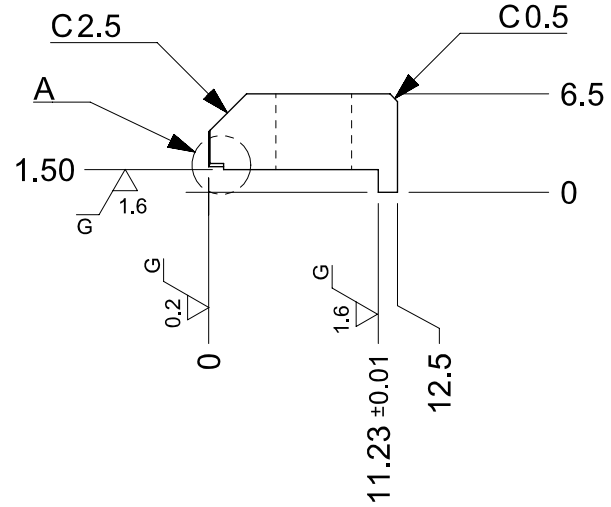

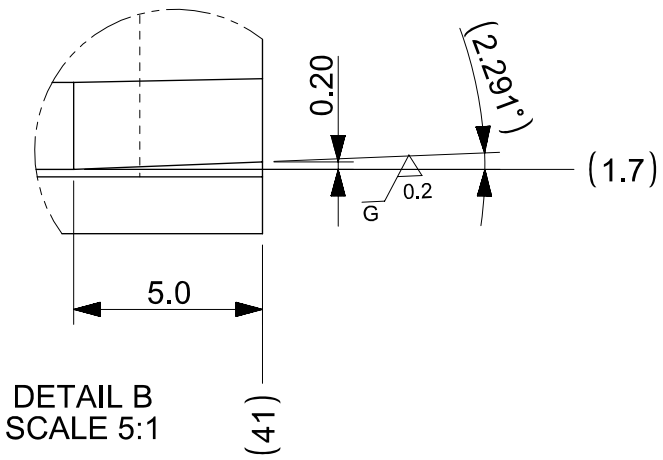

DETAIL B
SCALE 5:1

PO番号：PO-0940
IHP番号：IHP007
数量：1件
下单：11月22日
交期：12月3日

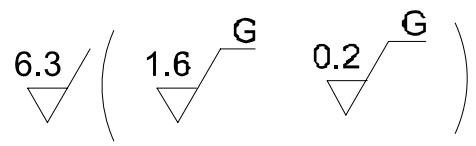

SURFACE FINISH

0.2	
1.6	
6.3	
25	

DIMENSION MARK

↧	DEPTH
⌴	C'BORE
∨	C'SINK

镀硬铬

BREAK ALL SHARP EDGES 0.1mm UNLESS OTHERWISE SPECIFIED
ALL INSIDE CORNERS TO BE R0.2 MAX UNLESS OTHERWISE SPECIFIED

DIMENSION UNITS: mm	SCALE: 2:1	Material: SKD11	
GENERAL TOLERANCES (UNLESS SPECIFIED)		Heat treat: HRC 62	
		Finish: HARD CHROME	
ANGULAR TOL ± .5°		CURRENT REV DESC: EC DESCRIPTION	
4 PLACES ± ---			
3 PLACES ± 0.005			
2 PLACES ± 0.05		EC NO: EC NO	
1 PLACE ± 0.1		DRWN: M.KAMEI 2022/11/16	
0 PLACES ± 0.3		CHK'D: G.XINYAO 2022/11/16	
		APPR: T.KAYAMA 2022/11/16	
		ORIG DRWN BY: M.KAMEI 2022/11/16	
TOOL NUMBER ---		THIRD ANGLE PROJECTION	DRAWING A3-SIZE / SERIES —

CONVEYOR RAIL COVER1 R

TOOL DESIGN DRAWING

DOCUMENT NUMBER	DOC TYPE	DOC SUB-TYPE	REVISION
AMM38-A5-003	---	---	A

MATERIAL NUMBER	CUSTOMER	SHEET NUMBER
	--	1 OF 1

DOCUMENT STATUS	P1	RELEASE DATE	

FORMAT: tb-tool-A3
REVISION: J1
DATE: 2021/05/01

A1

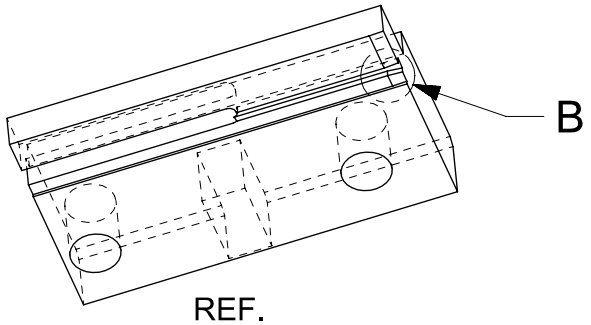

REF.
SCALE 2:1

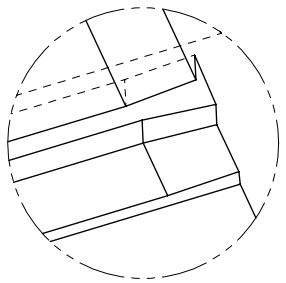

DETAIL B
SCALE 10:1

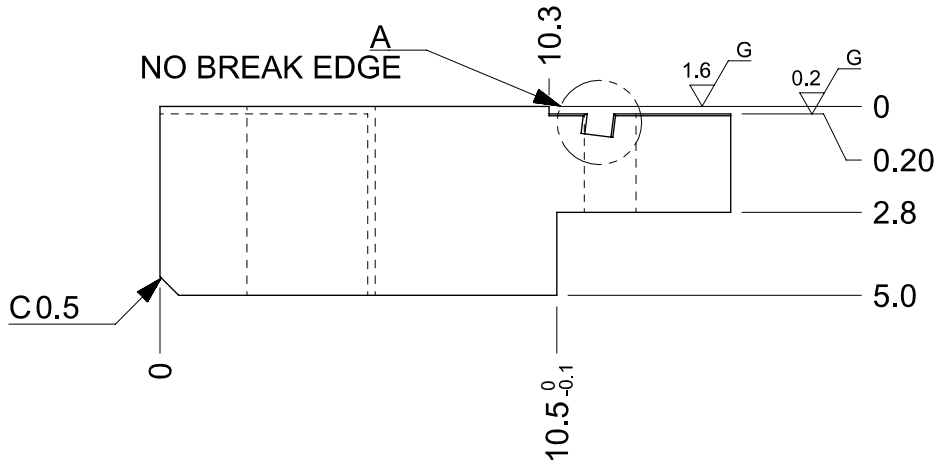

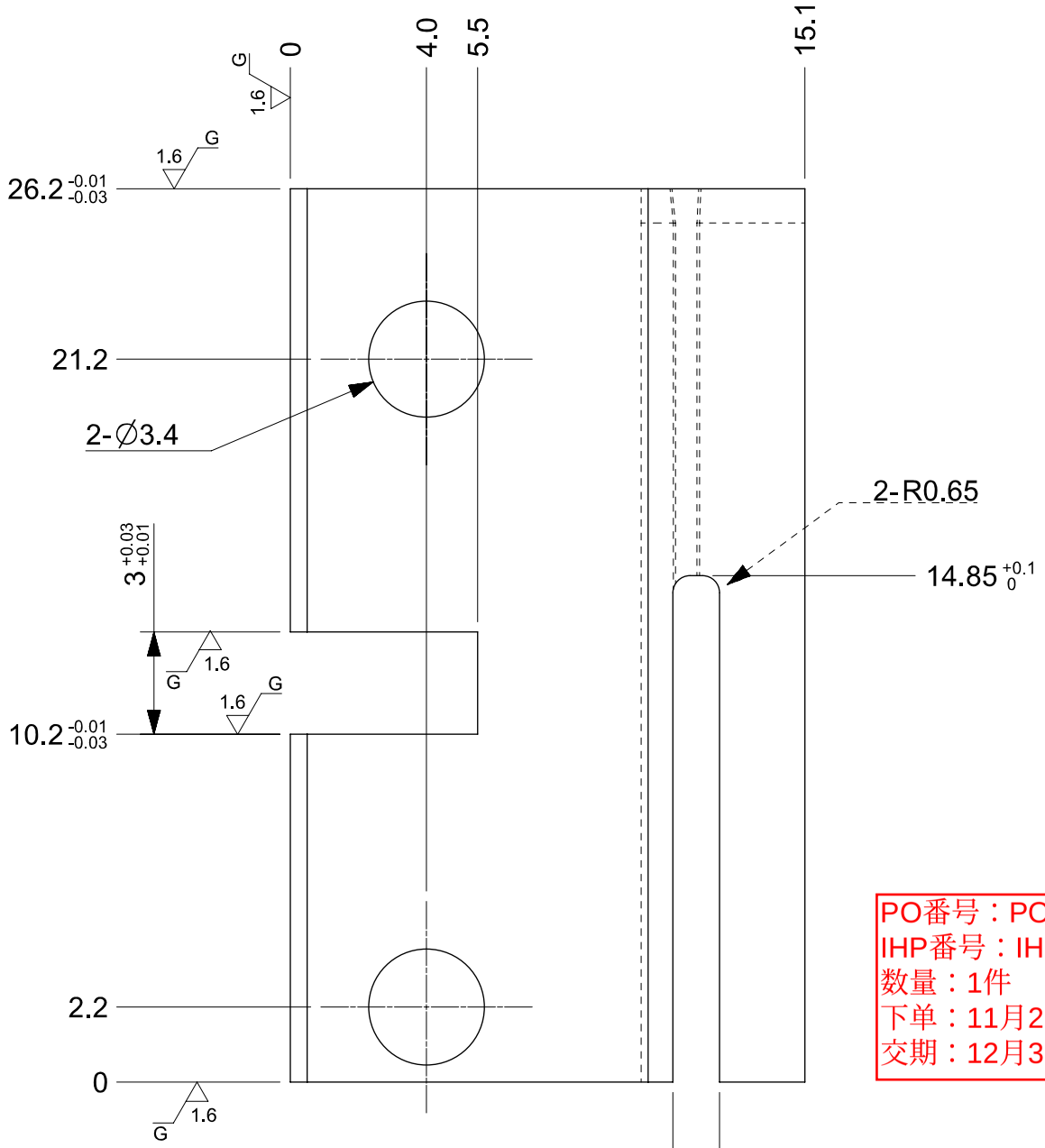

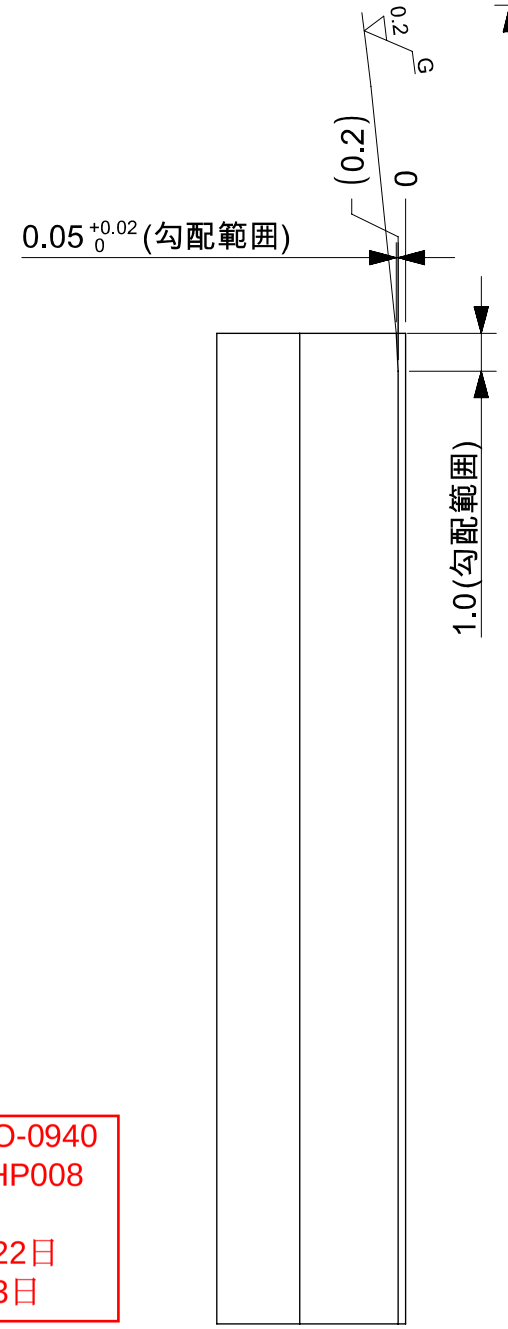

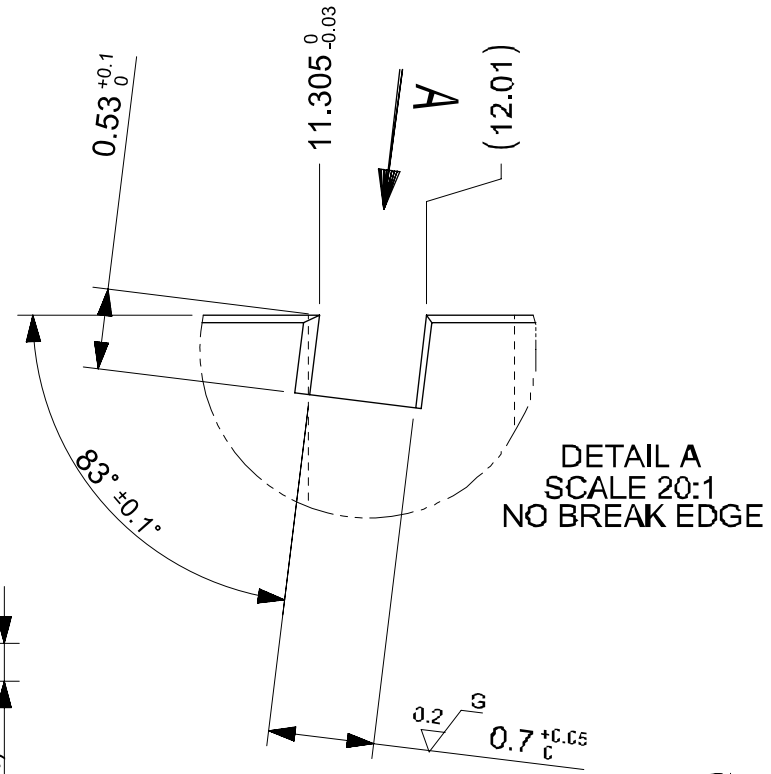

DETAIL A
SCALE 20:1
NO BREAK EDGE

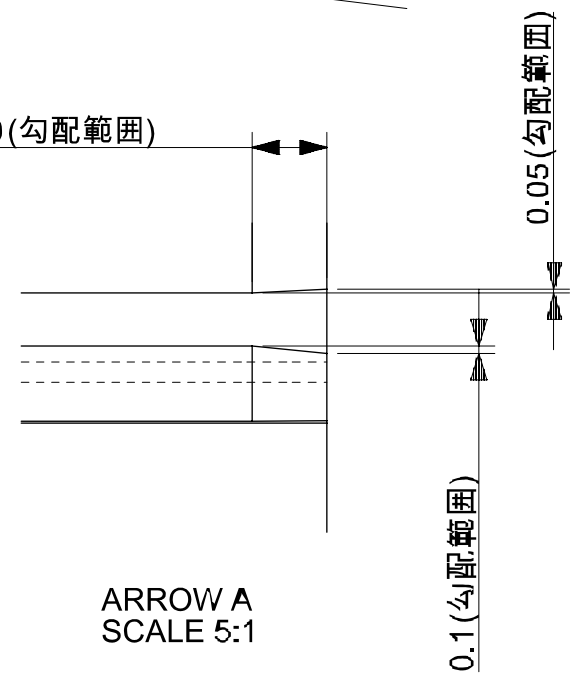

ARROW A
SCALE 5:1

PO番号：PO-0940
IHP番号：IHP008
数量：1件
下単：11月22日
交期：12月3日

11.23 ±0.02
12.6 +0.05 0

6.3 (1.6 G 0.2 G)

镀硬铬

SURFACE FINISH

0.2	▽▽▽▽
1.6	▽▽▽
6.3	▽▽
25	▽
○	~

DIMENSION MARK

↧	DEPTH
⌴	C'BORE
∨	

	铣	快丝	车	热处	磨	CNC	慢丝	火花	表处	
加工顺序										
加工人签字（工号）										

BREAK ALL SHARP EDGES 0.1mm UNLESS OTHERWISE SPECIFIED
ALL INSIDE CORNERS TO BE R0.2 MAX UNLESS OTHERWISE SPECIFIED

DOCUMENT STATUS	P1	RELEASE DATE	

DIMENSION UNITS	SCALE
mm	5:1

GENERAL TOLERANCES (UNLESS SPECIFIED)

ANGULAR TOL	±	.5°
4 PLACES	±	--
3 PLACES	±	0.005
2 PLACES	±	0.05
1 PLACE	±	0.1
0 PLACES	±	0.3

TOOL NUMBER: --

Material: SKD11
Heat treat: HRC 62
Finish: HARD CHROME
CURRENT REV DESC: EC DESCRIPTION

EC NO:	EC NO	
DRWN:	M.SAKAGUCHI	2022/11/16
CHK'D:	G.XINYAO	2022/11/16
APPR:	T.KAYAMA	2022/11/16
ORIG DRWN BY:	M.SAKAGUCHI	2022/11/16

THIRD ANGLE PROJECTION | DRAWING: A3-SIZE | SERIES: --

CONVEYOR RAIL COVER4

TOOL DESIGN DRAWING

DOCUMENT NUMBER	DOC TYPE	DOC SUB	REVISION
AMM38-A5-004	---	---	A

MATERIAL NUMBER | CUSTOMER: -- | SHEET NUMBER: 1 OF 1

FORMAT: tb-tool-d
REVISION: J1
DATE: 2021/05/07

A1

	铣	快丝	车	热处	磨	CNC	慢丝	火花	表处	
加工顺序										
加工人签字（工号）										

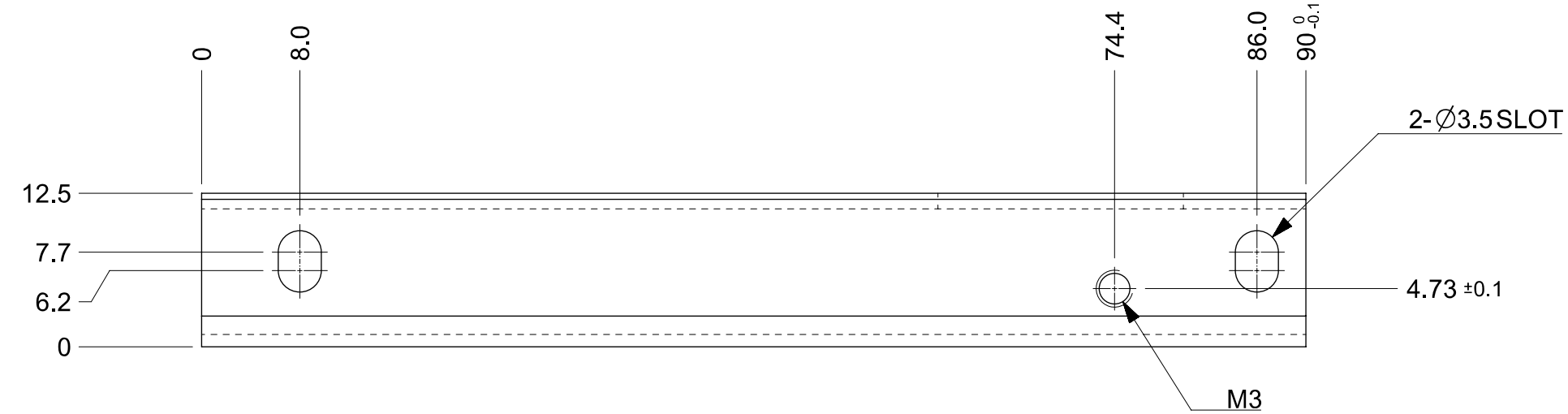

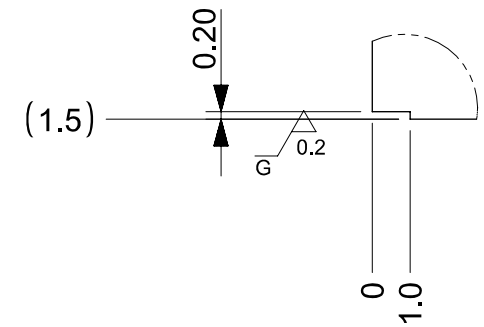

DETAIL A
SCALE 5:1

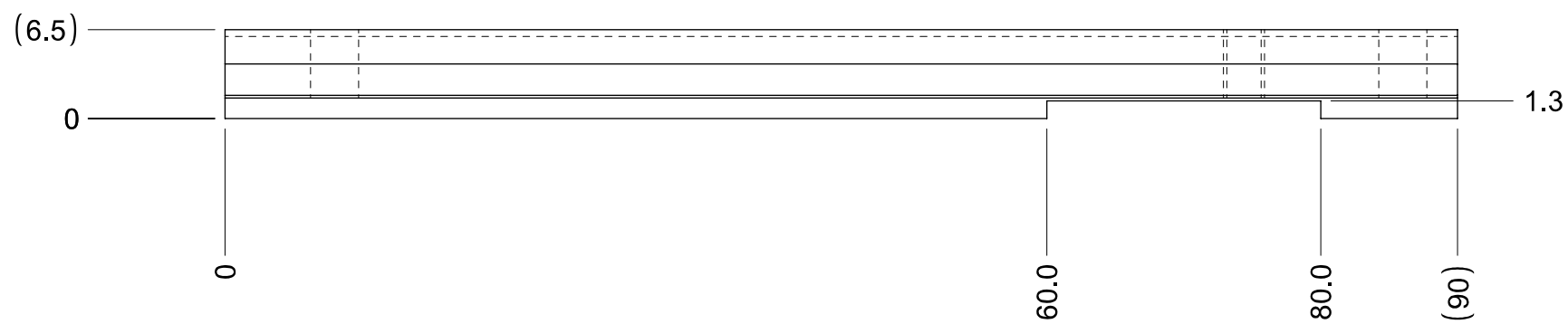

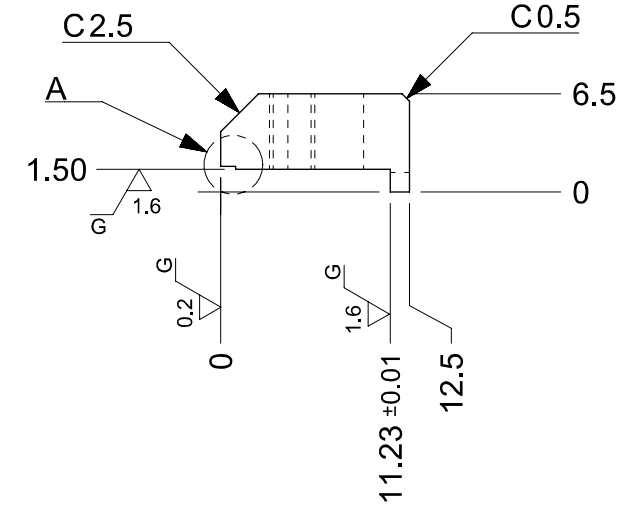

PO番号：PO-0940
IHP番号：IHP009
数量：1件
下单：11月22日
交期：12月3日

6.3 (1.6 G 0.2 G)

SURFACE FINISH

0.2	
1.6	
6.3	
25	

DIMENSION MARK

↧	DEPTH
⌴	C'BORE
∨	C'SINK

镀硬铬

BREAK ALL SHARP EDGES 0.1mm UNLESS OTHERWISE SPECIFIED
ALL INSIDE CORNERS TO BE R0.2 MAX UNLESS OTHERWISE SPECIFIED

DOCUMENT STATUS	P1	RELEASE DATE	

DIMENSION UNITS	SCALE
mm	2:1

GENERAL TOLERANCES (UNLESS SPECIFIED)

ANGULAR TOL	±	.5°
4 PLACES	±	--
3 PLACES	±	0.005
2 PLACES	±	0.05
1 PLACE	±	0.1
0 PLACES	±	0.3

TOOL NUMBER: --

Material: SKD11
Heat treat: HRC 62
Finish: HARD CHROME

CURRENT REV DESC: EC DESCRIPTION

EC NO:	EC NO	
DRWN:	M.KAMEI	2022/11/16
CHK'D:	G.XINYAO	2022/11/16
APPR:	T.KAYAMA	2022/11/16
ORIG DRWN BY:	M.KAMEI	2022/11/16

THIRD ANGLE PROJECTION | DRAWING: A3-SIZE | SERIES: --

CONVEYOR RAIL COVER2 R

TOOL DESIGN DRAWING

DOCUMENT NUMBER	DOC TYPE	DOC SUB	REVISION
AMM38-A5-005	---	---	A

MATERIAL NUMBER | CUSTOMER: -- | SHEET NUMBER: 1 OF 1

FORMAT: tb-tool-A3
REVISION: J1
DATE: 2021/05/01

A1

	铣	快丝	车	热处	磨	CNC	慢丝	火花	表处	
加工顺序										
加工人签字（工号）										

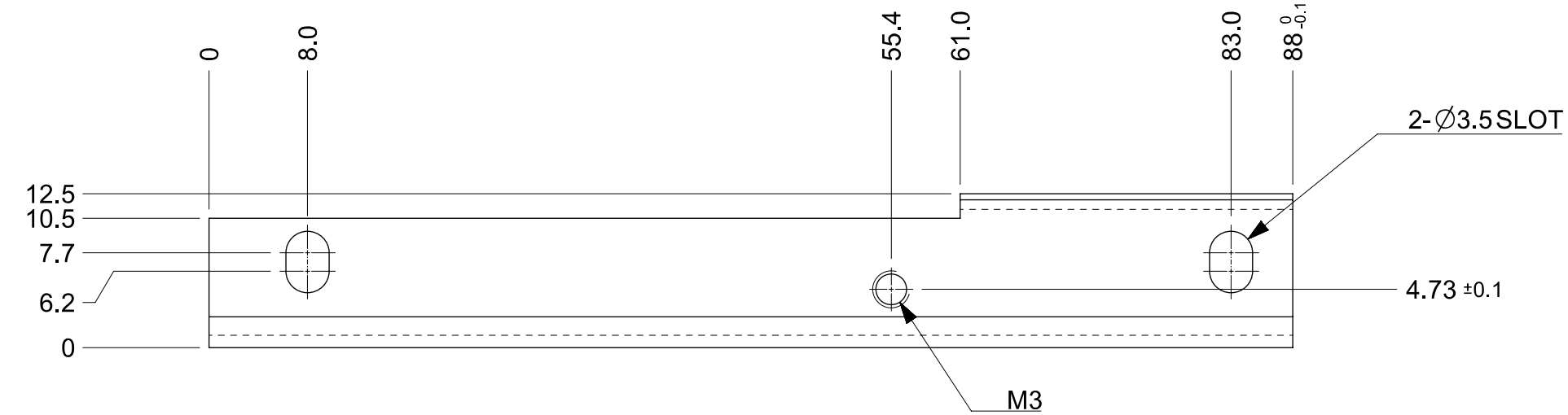

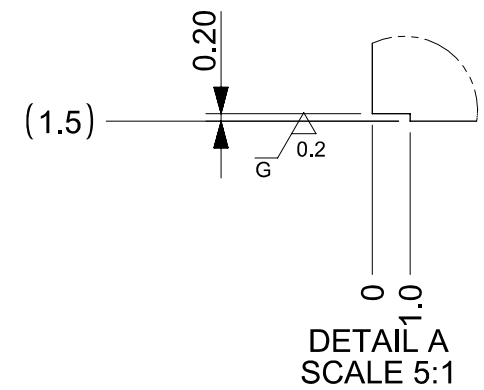

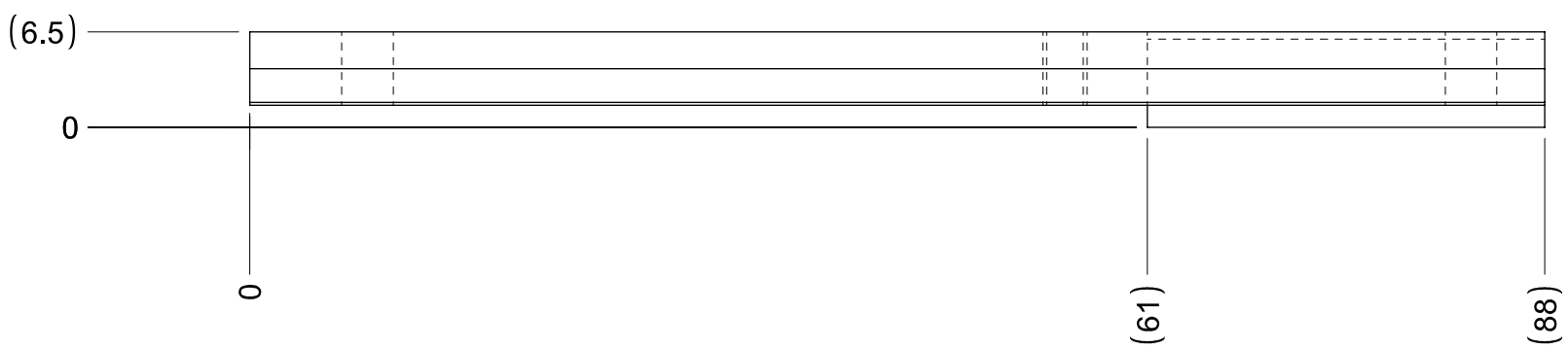

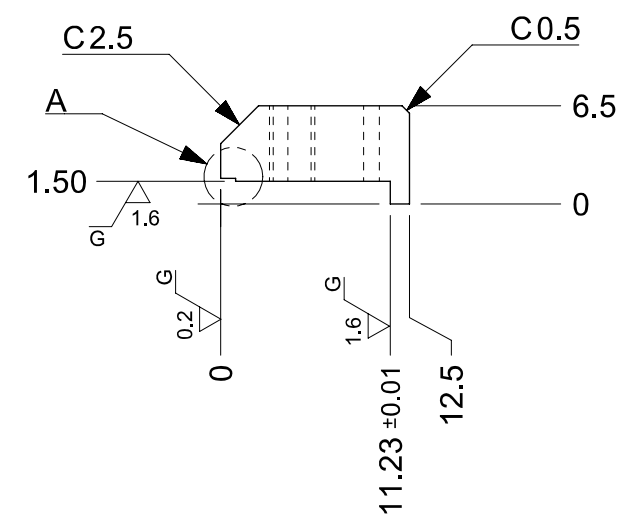

PO番号：PO-0940
IHP番号：IHP010
数量：1件
下单：11月22日
交期：12月3日

6.3 (1.6 G 0.2 G)

SURFACE FINISH

0.2	
1.6	
6.3	
25	

DIMENSION MARK

↧	DEPTH
⌴	C'BORE
∨	C'SINK

镀硬铬

BREAK ALL SHARP EDGES 0.1mm UNLESS OTHERWISE SPECIFIED
ALL INSIDE CORNERS TO BE R0.2 MAX UNLESS OTHERWISE SPECIFIED

DOCUMENT STATUS	P1	RELEASE DATE	

DIMENSION UNITS	SCALE
mm	2:1

GENERAL TOLERANCES (UNLESS SPECIFIED)		
ANGULAR TOL	±	.5°
4 PLACES	±	--
3 PLACES	±	0.005
2 PLACES	±	0.05
1 PLACE	±	0.1
0 PLACES	±	0.3

TOOL NUMBER: --

Material: SKD11
Heat treat: HRC 62
Finish: HARD CHROME

CURRENT REV DESC: EC DESCRIPTION

EC NO:	EC NO	
DRWN:	M.KAMEI	2022/11/16
CHK'D:	G.XINYAO	2022/11/16
APPR:	T.KAYAMA	2022/11/16
ORIG DRWN BY:	M.KAMEI	2022/11/16

THIRD ANGLE PROJECTION | DRAWING: A3-SIZE | SERIES: —

CONVEYOR RAIL COVER3 R

TOOL DESIGN DRAWING

DOCUMENT NUMBER	DOC TYPE	DOC SUB	REVISION
AMM38-A5-006	---	---	A

MATERIAL NUMBER | CUSTOMER: -- | SHEET NUMBER: 1 OF 1

FORMAT: tb-tool-A3
REVISION: J1
DATE: 2021/05/01

A1

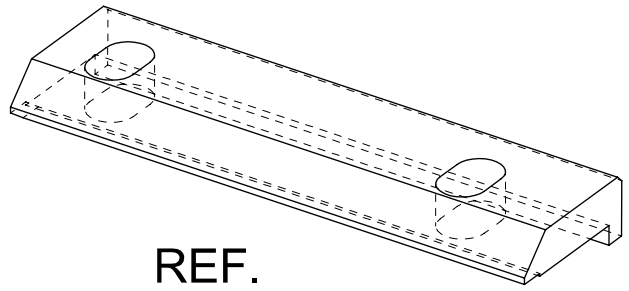

REF.
SCALE 2:1

	铣	快丝	车	热处	磨	CNC	慢丝	火花	表处	
加工顺序										
加工人签字（工号）										

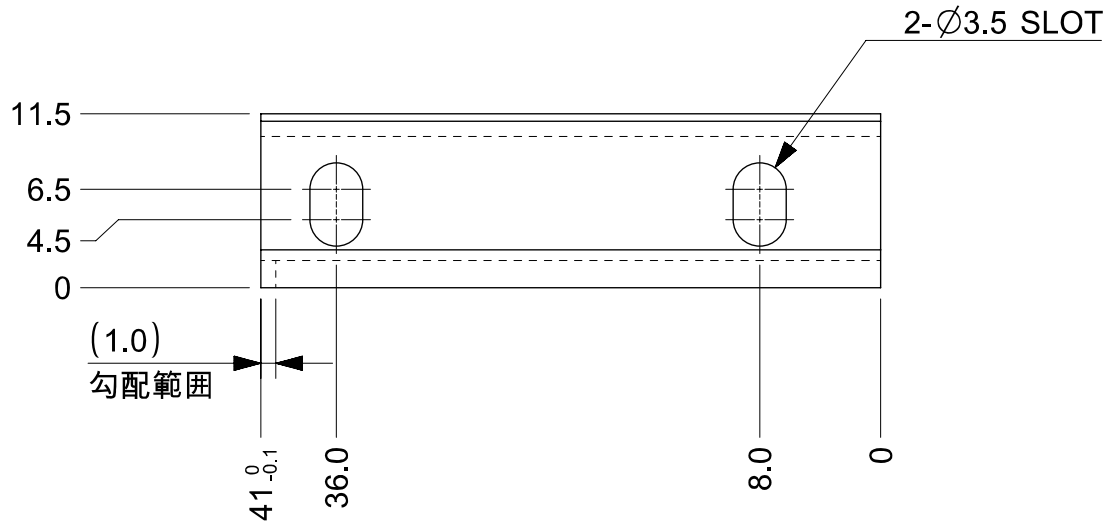

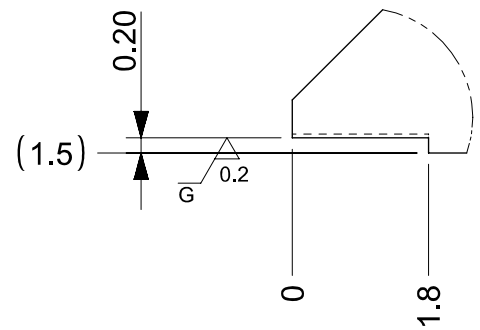

DETAIL B
SCALE 10:1

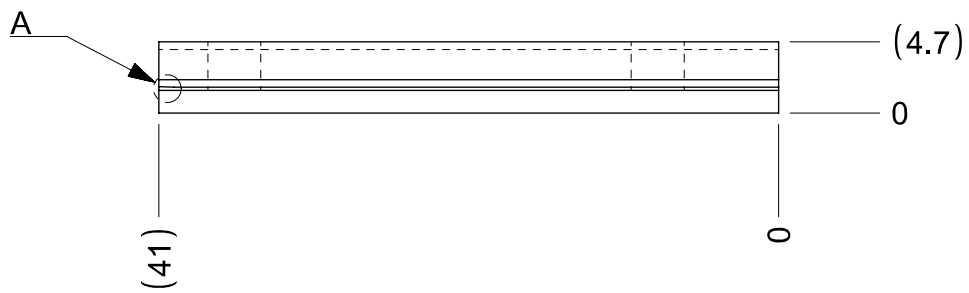

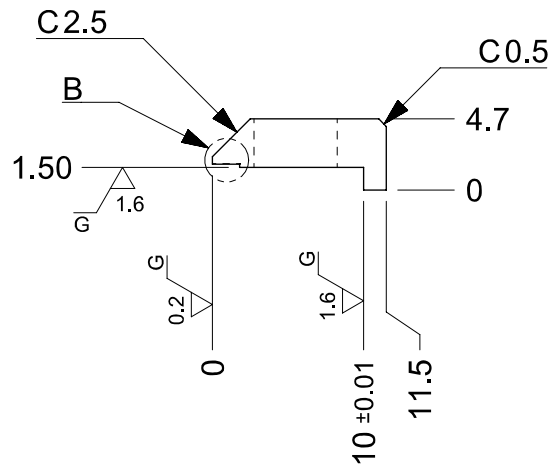

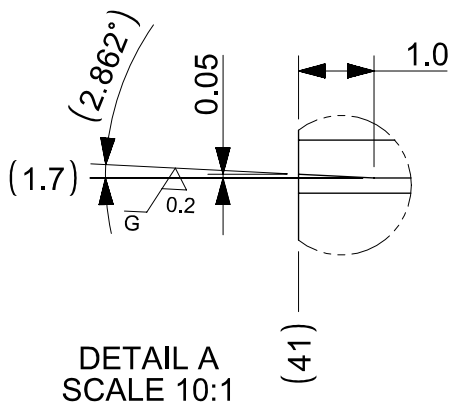

DETAIL A
SCALE 10:1

PO番号：PO-0940
IHP番号：IHP011
数量：1件
下单：11月22日
交期：12月3日

镀硬铬

6.3 (1.6 G 0.2 G)

SURFACE FINISH

0.2	
1.6	
6.3	
25	

DIMENSION MARK

↧	DEPTH
⌴	C'BORE
∨	C'SINK

BREAK ALL SHARP EDGES 0.1mm UNLESS OTHERWISE SPECIFIED
ALL INSIDE CORNERS TO BE R0.2 MAX UNLESS OTHERWISE SPECIFIED

DOCUMENT STATUS	P1	RELEASE DATE	

DIMENSION UNITS	SCALE
mm	5:1

GENERAL TOLERANCES (UNLESS SPECIFIED)

ANGULAR TOL	±	.5°
4 PLACES	±	--
3 PLACES	±	0.005
2 PLACES	±	0.05
1 PLACE	±	0.1
0 PLACES	±	0.3

TOOL NUMBER: --

Material: SKD11
Heat treat: HRC 62
Finish: HARD CHROME

CURRENT REV DESC: EC DESCRIPTION

EC NO:	EC NO	
DRWN:	M.SAKAGUCHI	2022/11/17
CHK'D:	G.XINYAO	2022/11/17
APPR:	T.KAYAMA	2022/11/17
ORIG DRWN BY:	M.SAKAGUCHI	2022/11/17

THIRD ANGLE PROJECTION | DRAWING: A3-SIZE | SERIES: --

CONVEYOR RAIL COVER1 L

TOOL DESIGN DRAWING

DOCUMENT NUMBER	DOC TYPE	DOC PART	REVISION
AMM38-A5-046	---	---	A

MATERIAL NUMBER | CUSTOMER: -- | SHEET NUMBER: 1 OF 1

FORMAT: tb-tool-A3
REVISION: J1
DATE: 2021/05/01

A1

	铣	快丝	车	热处	磨	CNC	慢丝	火花	表处	
加工顺序										
加工人签字（工号）										

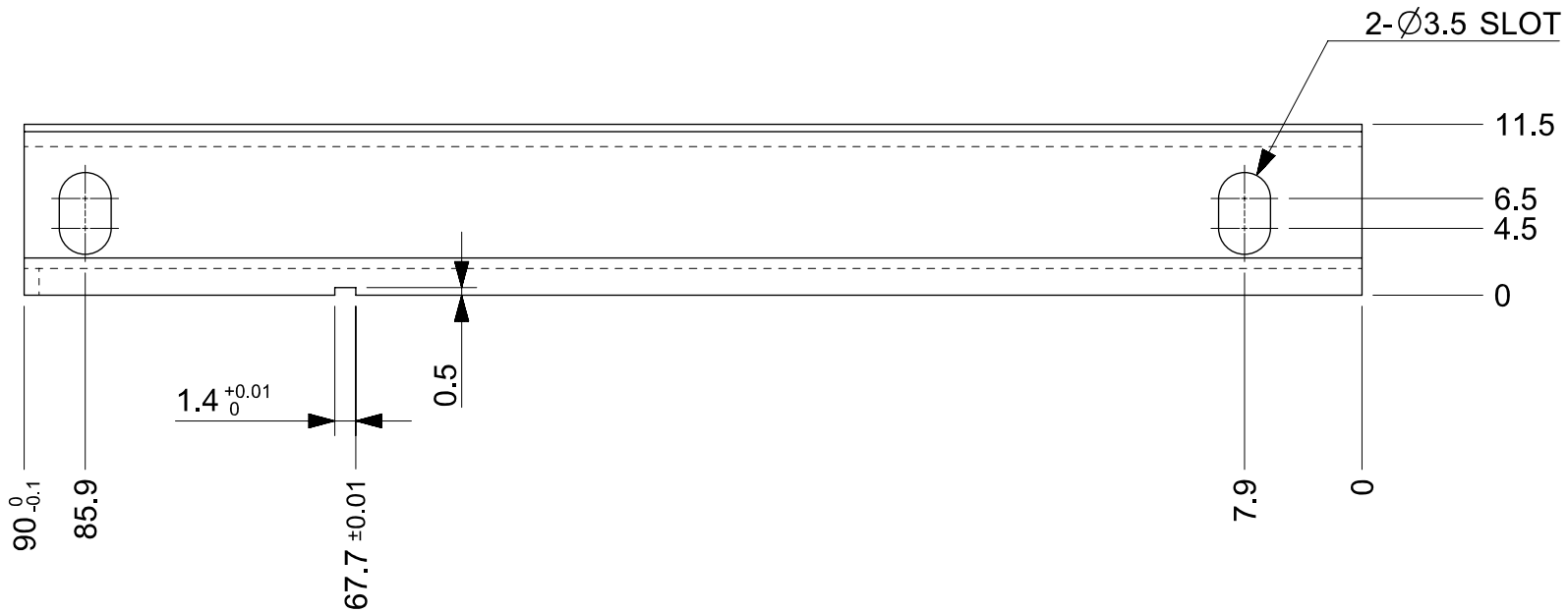

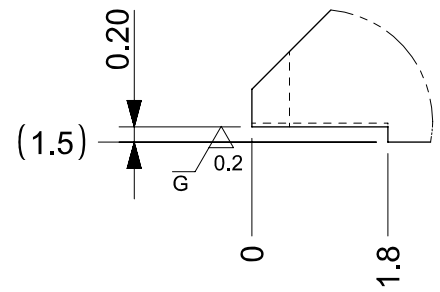

DETAIL A
SCALE 10:1

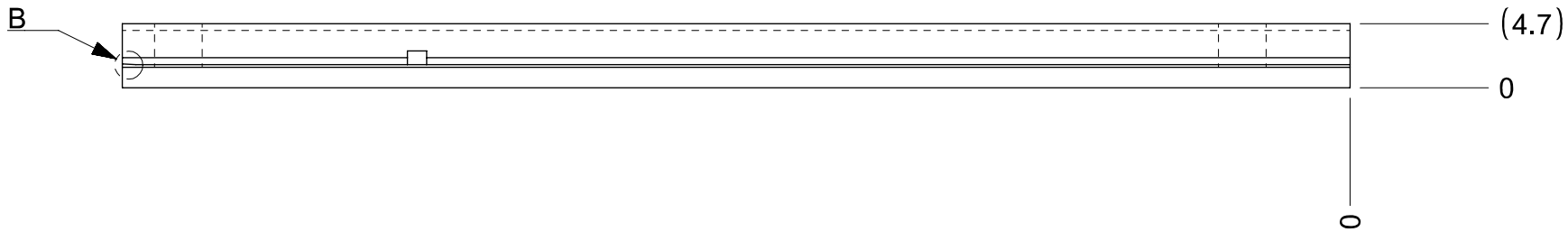

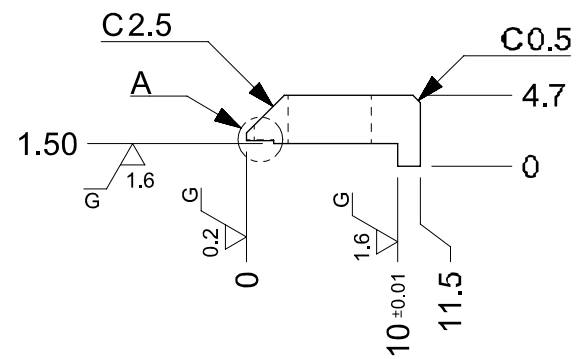

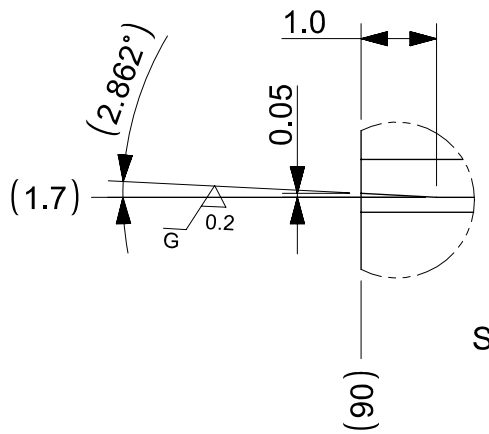

DETAIL B
SCALE 10:1

PO番号：PO-0940
IHP番号：IHP012
数量：1件
下单：11月22日
交期：12月3日

镀硬铬

SURFACE FINISH

0.2	
1.6	
6.3	
25	

DIMENSION MARK

↧	DEPTH
⌴	C'BORE
∨	C'SINK

6.3 (1.6 G 0.2 G)

BREAK ALL SHARP EDGES 0.1mm UNLESS OTHERWISE SPECIFIED
ALL INSIDE CORNERS TO BE R0.2 MAX UNLESS OTHERWISE SPECIFIED

DIMENSION UNITS	SCALE
mm	2:1

GENERAL TOLERANCES (UNLESS SPECIFIED)

ANGULAR TOL	±	.5°
4 PLACES	±	--
3 PLACES	±	0.005
2 PLACES	±	0.05
1 PLACE	±	0.1
0 PLACES	±	0.3

TOOL NUMBER: --

Material: SKD11
Heat treat: HRC 62
Finish: HARD CHROME

CURRENT REV DESC: EC DESCRIPTION

EC NO:	EC NO	
DRWN:	M.SAKAGUCHI	2022/11/17
CHK'D:	G.XINYAO	2022/11/17
APPR:	T.KAYAMA	2022/11/17
ORIG DRWN BY:	M.SAKAGUCHI	2022/11/17

THIRD ANGLE PROJECTION | DRAWING: A3-SIZE | SERIES: --

CONVEYOR RAIL COVER2 L

TOOL DESIGN DRAWING

DOCUMENT NUMBER	DOC TYPE	DOC SUB-TYPE	REVISION
AMM38-A5-048	---	---	A

MATERIAL NUMBER | CUSTOMER: -- | SHEET NUMBER: 1 OF 1

DOCUMENT STATUS	P1	RELEASE DATE	

FORMAT: tb-tool-A3
REVISION: J1
DATE: 2021/05/01

A1

	铣	快丝	车	热处	磨	CNC	慢丝	火花	表处	
加工顺序										
加工人签字（工号）										

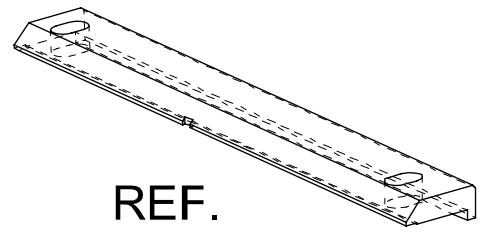

REF.
SCALE 1:1

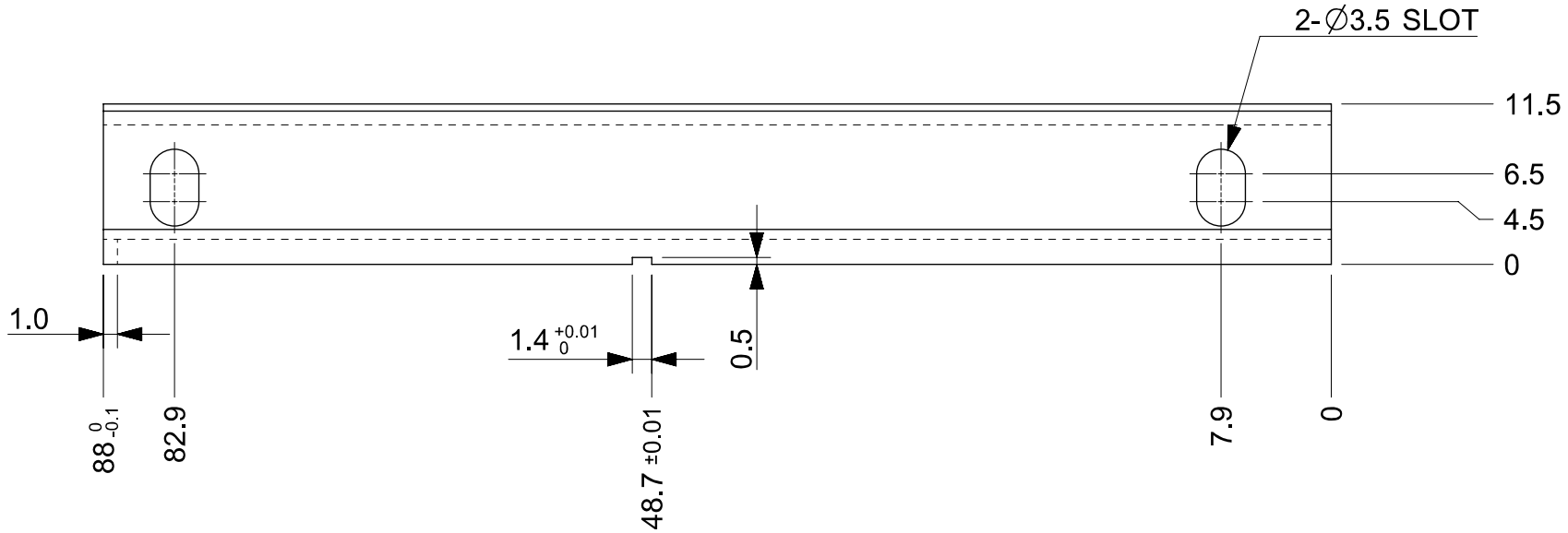

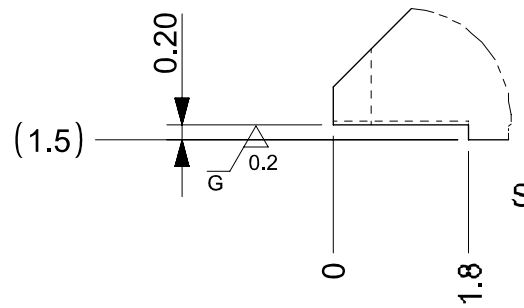

DETAIL A
SCALE 10:1

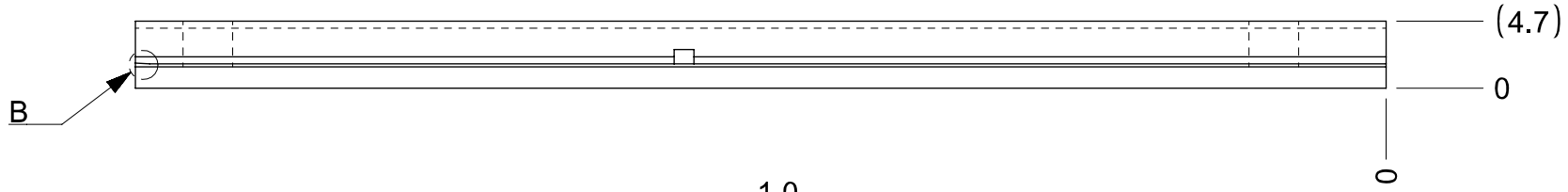

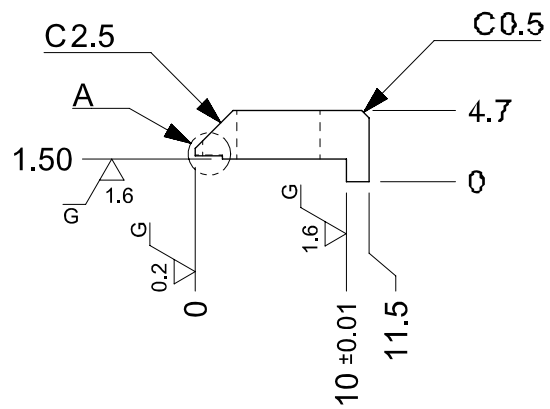

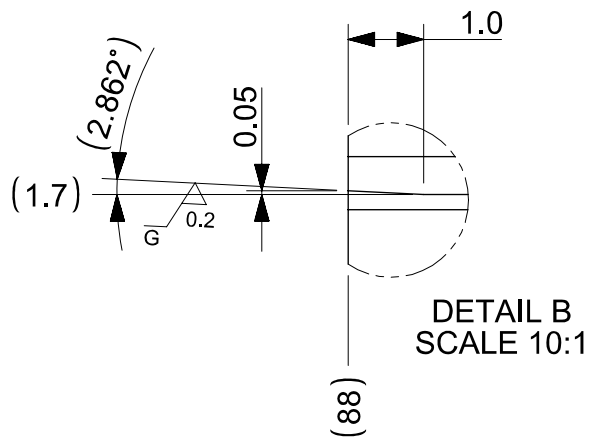

DETAIL B
SCALE 10:1

PO番号：PO-0940
IHP番号：IHP013
数量：1件
下单：11月22日
交期：12月3日

镀硬铬

SURFACE FINISH

0.2	
1.6	
6.3	
25	

DIMENSION MARK

↧	DEPTH
⌴	C'BORE
∨	C'SINK

6.3 (1.6 G 0.2 G)

BREAK ALL SHARP EDGES 0.1mm UNLESS OTHERWISE SPECIFIED
ALL INSIDE CORNERS TO BE R0.2 MAX UNLESS OTHERWISE SPECIFIED

DIMENSION UNITS	mm
SCALE	2:1
GENERAL TOLERANCES (UNLESS SPECIFIED)	
ANGULAR TOL	± .5°
4 PLACES	± --
3 PLACES	± 0.005
2 PLACES	± 0.05
1 PLACE	± 0.1
0 PLACES	± 0.3
TOOL NUMBER	--

Material: SKD11
Heat treat: HRC 62
Finish: HARD CHROME

CURRENT REV DESC: EC DESCRIPTION

EC NO:	EC NO	
DRWN:	M.SAKAGUCHI	2022/11/17
CHK'D:	G.XINYAO	2022/11/17
APPR:	T.KAYAMA	2022/11/17
ORIG DRWN BY:	M.SAKAGUCHI	2022/11/17

THIRD ANGLE PROJECTION | DRAWING: A3-SIZE | SERIES: --

CONVEYOR RAIL COVER3 L

TOOL DESIGN DRAWING

DOCUMENT NUMBER	DOC TYPE	DOC SUB-TYPE	REVISION
AMM38-A5-049	---	---	A

MATERIAL NUMBER | CUSTOMER: -- | SHEET NUMBER: 1 OF 1

DOCUMENT STATUS	P1	RELEASE DATE	

FORMAT: tb-tool-A3
REVISION: J1
DATE: 2021/05/01

A1

	铣	快丝	车	热处	磨	CNC	慢丝	火花	表处	
加工顺序										
加工人签字（工号）										

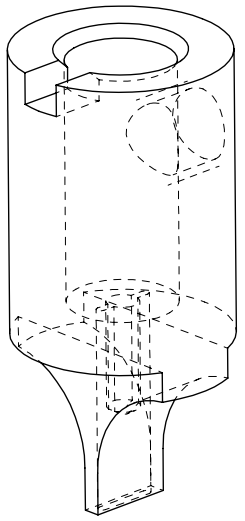

REF.
SCALE 3:1

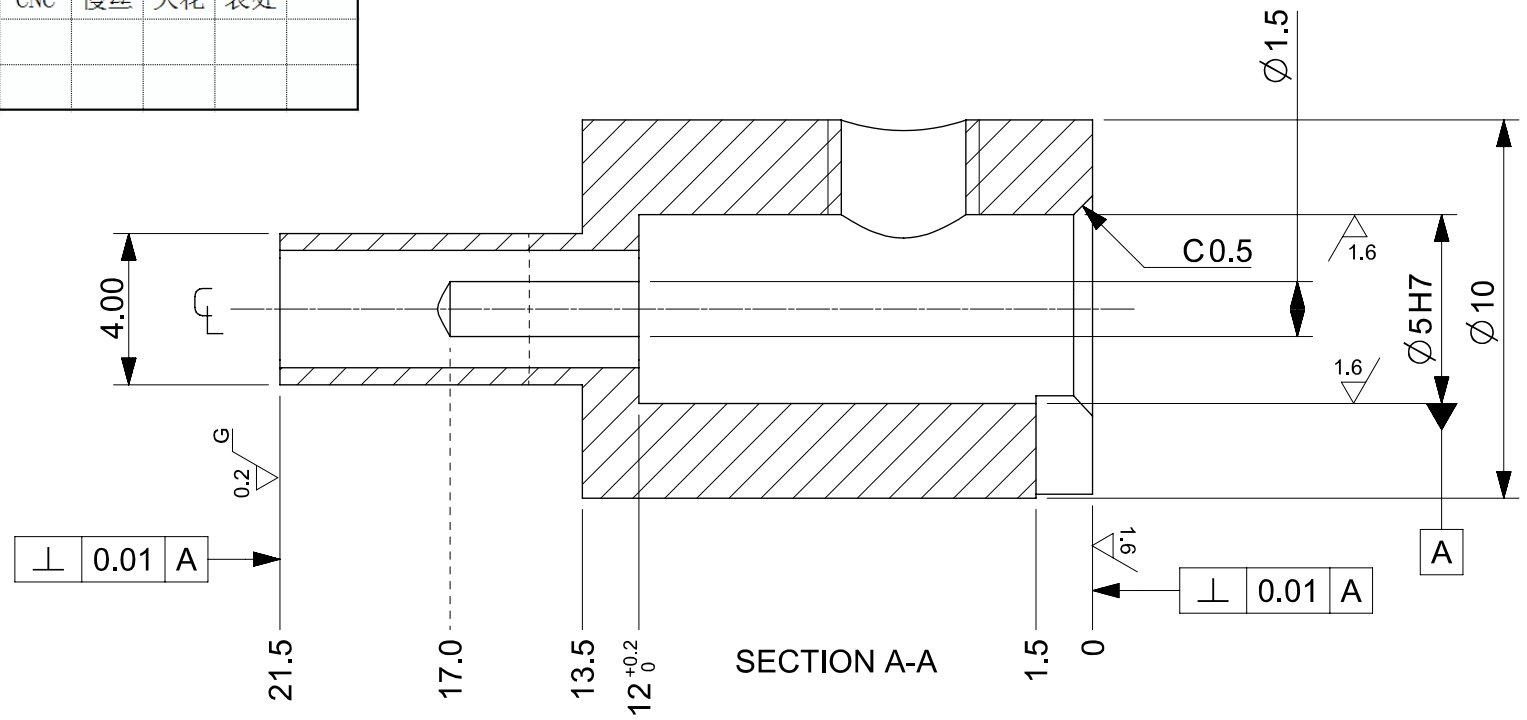

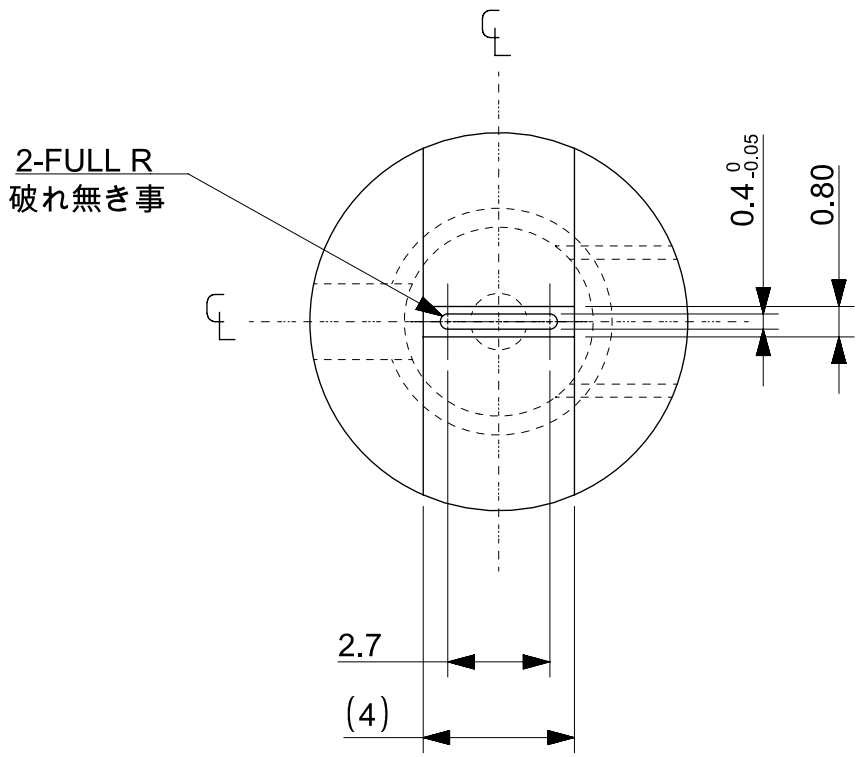

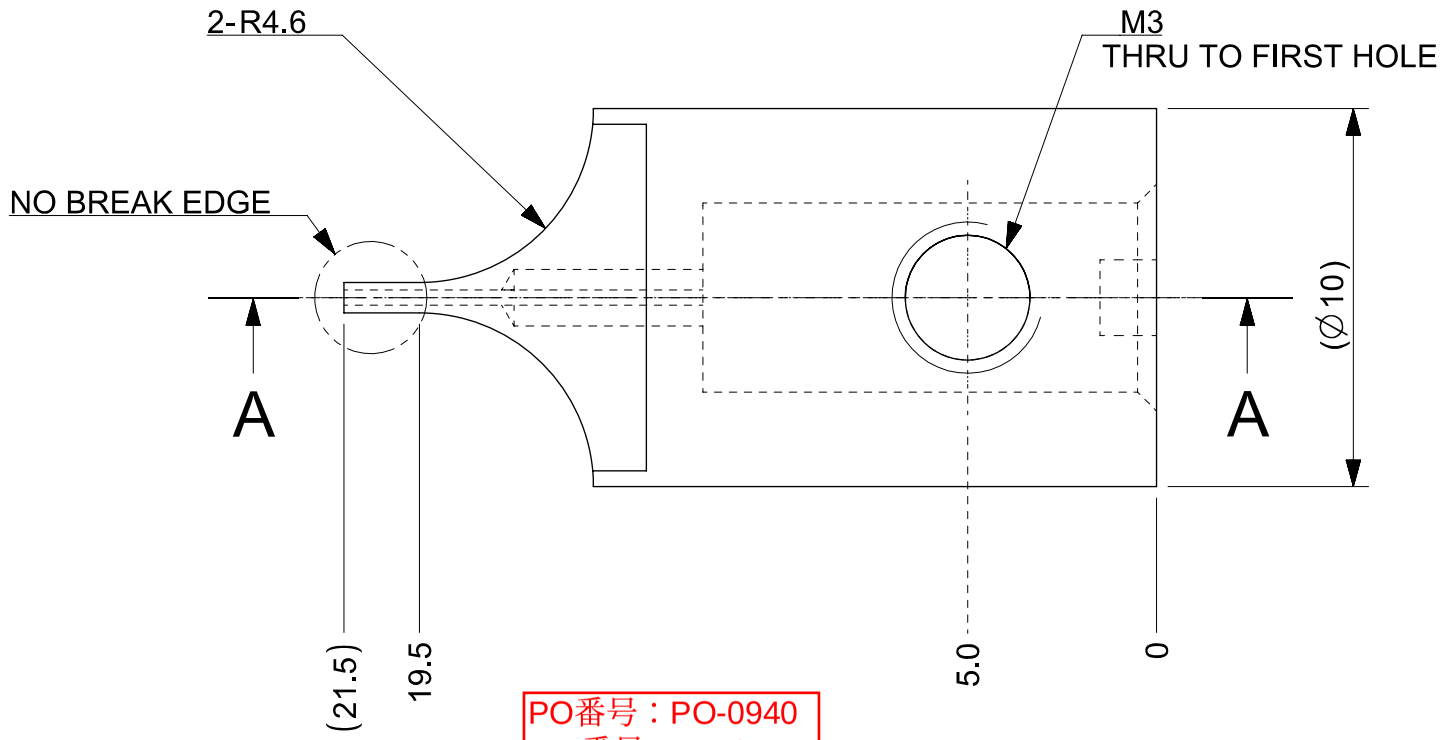

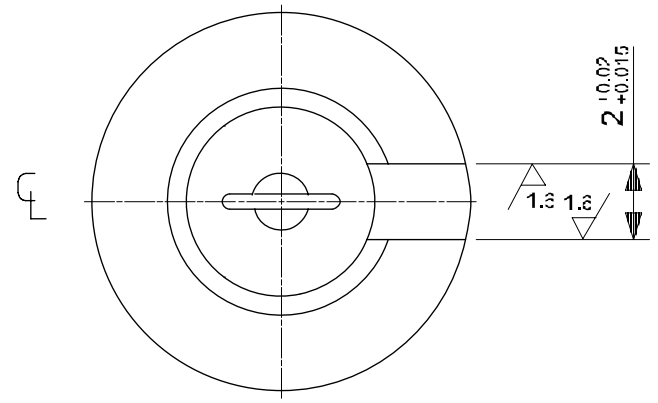

PO番号：PO-0940
IHP番号：IHP014
数量：1件
下单：11月22日
交期：12月3日

无表面处理

SURFACE FINISH

0.2	
1.6	
6.3	
25	

DIMENSION MARK

↧	DEPTH
⌴	C'BORE
∨	C'SINK

6.3 (1.6 0.2 G)

BREAK ALL SHARP EDGES 0.3mm UNLESS OTHERWISE SPECIFIED
ALL INSIDE CORNERS TO BE R0.2 MAX UNLESS OTHERWISE SPECIFIED

DIMENSION UNITS	SCALE
mm	5:1

GENERAL TOLERANCES (UNLESS SPECIFIED)		
ANGULAR TOL	±	.5°
4 PLACES	±	--
3 PLACES	±	0.005
2 PLACES	±	0.05
1 PLACE	±	0.1
0 PLACES	±	0.3

TOOL NUMBER: --

Material: SUS304
Heat treat: ---
Finish: ---
CURRENT REV DESC: EC DESCRIPTION

EC NO:	EC NO	
DRWN:	M.SAKAGUCHI	2022/11/17
CHK'D:	G.XINYAO	2022/11/17
APPR:	T.KAYAMA	2022/11/17
ORIG DRWN BY:	M.SAKAGUCHI	2022/11/17

THIRD ANGLE PROJECTION | DRAWING: A3-SIZE | SERIES: --

NOZZLE 6P OVER

TOOL DESIGN DRAWING

DOCUMENT NUMBER	DOC TYPE	DOC PART	REVISION
AMM38-Q3-014	---	---	A

MATERIAL NUMBER | CUSTOMER: -- | SHEET NUMBER: 1 OF 1

DOCUMENT STATUS	P1	RELEASE DATE	

FORMAT: tb-tool-A3
REVISION: J1
DATE: 2021/05/01